Rated Voltage (Vac)	400
Rated Power (w)	1800
Rated Torque (N.m)	11.5
Peak Torque (N.m)	34.5
Rated Speed (rpm)	**1500**
Peak Speed (rpm)	**3000**
Rated Current (Amp)	6.5
Peak Current (Amp)	19.5
Torque Const (N.m/Amp)	1.77
Back EMF Const (V/krpm)	120
Resistance (Ω)	1.75±10%
Inductance (mH)	10.7±20%
Inertia ($kg*m^2*10^{-4}$)	23.69
Poles	**10**
Encoder type	**23bit absolute**
IP rating	**IP65**
Mass (Kg)	8.1

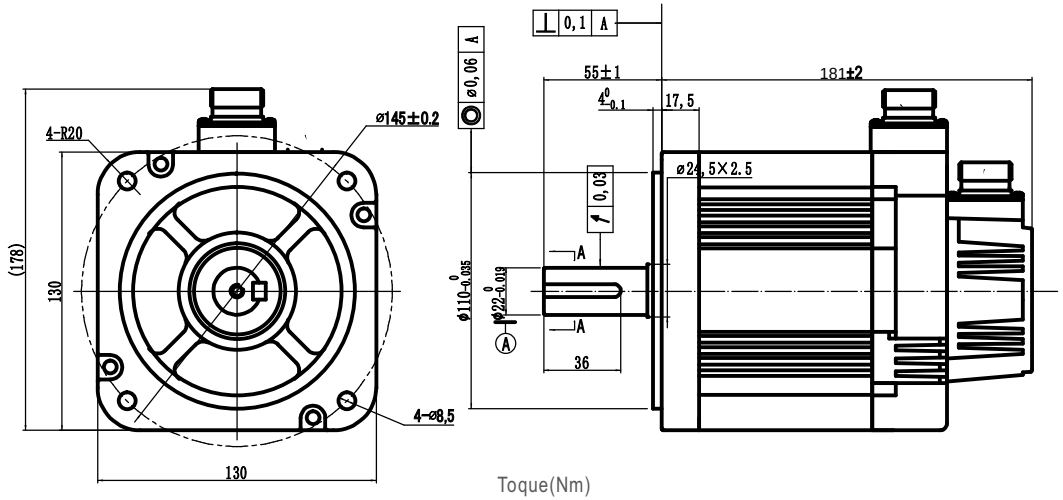

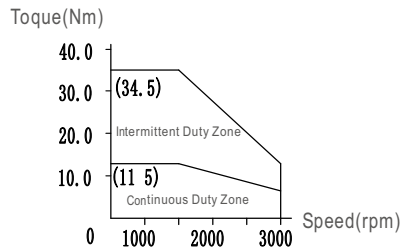

Connector Code Of Extension Cable Side			
Type	Winding Connector	Encoder Connector	Brake Connector
Connector	YD28K4TSJ	YD28K7TSJ	-

Connector Code Of Motor Side			
Type	Winding Connector	Encoder Connector	Brake Connector
Connector	YD28J4Z	YD28J7Z	-

Wiring details of Power cable connector				
Pos	1	2	3	4
Signal	PE	U	V	W

Wiring details of encoder cable connector							
Pos	1	2	3	4	5	6	7
Signal	PE	5V	0V	SD+	SD-	BAT+	BAT-

Leadshine Technology Co .Ltd

ELM2H-1800LD130FT-H

130mm , high inertia , 1800w servo motor
23bit multi-turn absolute encoder , no brake

www.leadshine.com

A3