EM3E Series

EtherCAT Stepper Drive

User Manual

For models of EM3E-522E, EM3E-556E and EM3E-870E

©2020 Leadshine Technology Co., Ltd.

Address: 15-20/F, Block B, Nanshan I Valley, No.3185, Shahe West Road, Nanshan District,

Shenzhen, Guangdong, 518055, China

Tel: (86)755-26409254 ***Fax:*** (86)755-26402718

Web: www.leadshine.com ***Sales:*** sales@leadshine.com

Support: tech@leadshine.com

Notice

Read this manual carefully before any assembling and using. Incorrect handling of products in this manual can result in injury and damage to persons and machinery. Strictly adhere to the technical information regarding installation requirements.

This manual is not for use or disclosure outside of Leadshine except under permission. All rights are reserved. No part of this manual shall be reproduced, stored in retrieval form, or transmitted by any means, electronic, mechanical, photocopying, recording, or otherwise without approval from Leadshine. While every precaution has been taken in the preparation of the book, Leadshine assumes no responsibility for errors or omissions. Neither is any liability assumed for damages resulting from the use of the information contained herein.

This document is proprietary information of Leadshine that is furnished for customer use ONLY. Information in this document is subject to change without notice and does not represent a commitment on the part of Leadshine. Therefore, information contained in this manual may be updated from time-to-time due to product improvements, etc., and may not conform in every respect to former issues.

EtherCAT Conformance tested

EM3E Passed the ETC Laboratory Conformance Tested

EtherCAT ® is a registered trademark and patented technology, licensed by Beckhoff Automation GmbH, Germany.

- **Thank you for purchasing Leadshine EM3E Series Products**
- **Please read this manual carefully before operating**
- **Please keep this manual appropriately**

Record of Revisions

Reversion	Data	Description of Release
V1.0	11/02/2017	Initial Release
V1.2	06/01/2020	Add debug port, change ESI file

Safety Precautions

Overall Notes

- Do not remove the housing with the drive powered on. Cables. Connectors and optional equipment.
- Please disconnect the power supply for at least 2 minutes and make sure the power indicator is off before wiring and checking. Even if the power is disconnected, voltage may remain inside the drive. Therefore, do not touch the power terminals while the power indicator is on.

- Please use the power supply specifications (number of phases.) that match the product. Voltage. Frequency. AC/DC).
- Be sure to connect the ground terminal of the driver (mounting surface) and motor to the ground pole.
- Do not damage or drag the cable, do not overstress the cable, do not hang heavy objects on the cable, or get caught in the cabinet door.
- Please do not disassemble the product yourself. Repair or modification.
- When the machine is connected to the machine and starts to operate, make sure that the machine is ready for emergency stop.
- Do not touch the inside of the drive.

- The heat sink of the driver may be hot when the power is on or when the power is just cut off. The motor, etc. may be in a high temperature. Take safety measures such as installing a cover to prevent accidental touching by hands and parts (cables, etc.).
- Use double-insulated or reinforced insulation for control power.
- Do not use in places where water can be splashed. Corrosive environments. Do not use the product in the vicinity of flammable gases and combustible materials.
- Do not use damaged. Drivers and motors with missing parts.
- Please set up an emergency stop circuit externally to ensure that the power can be cut off and the operation can be stopped immediately in case of an abnormality.
- If the product is used under poor power conditions, install protection equipment (AC reactor, etc.) to ensure that the input power is supplied within the specified voltage variation range.
- Please use a noise filter to reduce the influence of electromagnetic interference.
- The driver and motor should be used in the specified combination.

Precautions for Storage and Transportation

- Please follow the Commands on the packaging for storage and do not overload the product.
- Please place this product in the following environment:
  - ➞No direct sunlight in the place.
  - ➞Ambient temperature does not exceed the product specification.
  - ➞Humidity does not exceed product specifications. Without condensation.
  - ➞No corrosive gases. Place of flammable gas.
  - ➞Dust. Dust. The place where there is less salt and metal powder.
  - ➞No water. Oil. The place where the splash of medicine, etc. occurs.
  - ➞Vibration or shock does not exceed product specifications.
  - ➞No equipment generating strong magnetic fields in the vicinity.

Precautions for Installation

- Please install the drive in a cabinet that provides fire protection. Electrical protection in the control cabinet.
- Please install the driver and motor in a position with sufficient weight resistance.
- Please install this product in the following environment:
  ➞No direct sunlight in the place.
  ➞Ambient temperature does not exceed the product specification.
  →Humidity does not exceed product specifications. Without condensation.
  ➞No corrosive gases. Place of flammable gas.
  ➞Dust. Dust. The place where there is less salt and metal powder.
  ➞No water. Oil. The place where the splash of medicine, etc. occurs.
  ➞Vibration or shock does not exceed product specifications.
  ➞No equipment generating strong magnetic fields in the vicinity.
- Do not block the air inlet and exhaust ports, and do not allow foreign objects to enter the drive and motor.
- Do not step on the product or place heavy objects on the drive.
- Please install the driver in the specified direction.
- Make sure to keep the specified intervals between the inner surfaces of the drive control cabinet and other machines.

Precautions for Wiring

- Do not pass the magnetic contactor in the wiring between the drive and the motor.
- Please connect the power terminal and motor terminal firmly.
- Keep a minimum distance of 10mm between the drive and the control cabinet or other equipment.
- Allow at least 30mm of wiring space above and below the driver.
- Signal cable. The encoder cable should be a twisted shielded cable with the shield grounded at both ends.
- The wiring length of the encoder is up to 20m.
- Reduce the frequency of power on/off as much as possible.

Precautions during operation

- To prevent accidents, perform a test run of the servo motor at no load (without the driver connected).
- When you install the machine and start operation, please set the user parameters in advance to match the machine.
- Positive limit (POT) during JOG operation and zero return operation. The signal of negative limit (NOT) is not valid.
- When using the motor on a vertical axis, please provide a safety device to avoid dropping the work-piece in case of alarm or over travel.
- When an alarm occurs, please reset it after investigating the cause and making sure it is safe.
- Do not use the brake of the holding motor for normal braking.

Table of Contents

1 Introduction.....1

1.1 Product Introduction.....1

1.2 Features.....1

1.3 Check of Product.....1

1.3.1 Arrival inspection.....1

1.3.2 Nameplate information.....1

1.3.3 Part number.....2

1.3.4 Parts description.....2

1.3.5 Accessory Cables.....2

2 Installation.....3

2.1 Storage and Installation Conditions.....3

2.1.1 Storage condition.....3

2.1.2 Operating ambience conditions.....3

2.2 Dimensions.....3

2.3 Installation Direction and Space.....3

3 Production Specifications.....5

3.1 Electrical and Operating Specifications.....5

3.1.1 EtherCAT Specifications.....5

3.1.2 Electrical and Operating Specifications.....5

3.2 Cable Specifications.....6

3.2.1 Power Supply Cable & Motor Cable.....6

3.2.2 I/O Signal Cable.....6

3.2.3 EtherCAT Communication Cable.....7

3.3 Connectors Specifications.....8

3.3.1 Connectors Definition.....8

3.3.2 CN1-Input Power Connector.....9

3.3.3 CN2-Motor Connector.....9

3.3.4 CN3-I/O Signals Connector.....9

3.3.5 CN4-EtherCAT Communication Connector.....10

3.3.6 CN5-Micro-USB Tuning Port.....10

3.3.7 DIP Switches- SW1-SW8.....11

3.4 I/O Signals Wiring.....11

3.4.1 Digital Input Wiring.....11

3.4.2 Digital Output Wiring.....12

3.4.3 Brake Output Wiring.....12

4 EtherCAT Object Dictionary.....13

4.1 Communication Object....13
4.2 Manufacture Specific Object....15
4.3 I/O Configuration Object....18
4.3.1 Input Ports Function Value....18
4.3.2 Input Ports Filter Time & Polarity Value....19
4.3.3 Output Ports Function & Polarity Value....20
4.3.4 Main Control Output Function....20
4.4 Motion Objects....20
4.5 XML File or ESI File....23
5 Error Code & Trouble Shooting....24
5.1 Error Code....24
5.2 Alarm LED....25
5.3 Alarm Clearing....26
6 Common Functions....27
6.1 Saving Parameters and Resetting Drive....27
6.2 Control Word and Operation Modes....27
6.3 Touch Probe....31
Appendix A: Homing Methods....33
Appendix B: Object Dictionaries....37
Appendix C: Connectors....45
Appendix D: FAQs....46

1 Introduction

1.1 Product Introduction

The newly released EM3E series drives support CANopen over EtherCAT (CoE) control and CiA 402 operating modes including Profile Position (PP), Profile Velocity (PV), Homing (HM) and Cyclic Synchronous Position (CSP). The products can be matched with many brands of EtherCAT controller/PLC such as Beckhoff, Omron, Trio, Keneyce, etc.

The EM3E series is highly reliable and affordable and performs excellently in many industrial applications such as solar equipment, textile, civil, robotics, power generation equipment, 3C, packaging...

1.2 Features

- CANopen over EtherCAT (CoE) with full support of CiA402,100Mbps full-duplex.
- Operation modes: Profile Position, Profile Velocity, Cyclic Synchronous Position, Homing
- 6 configurable digital inputs, 2 optically isolated digital outputs
- Low noise and vibration, smooth motion
- Supply voltage: 20-50VDC. Max output current: 2.2A, 5.6A, or 7.0A
- Micro-USB port for parameters configuration
- Matched with NEMA11/17/23/24/ 34 CM series stepper motors
- Protections for over voltage, over current, limit switch error, phase loss error, etc.

1.3 Check of Product

1.3.1 Arrival inspection

- Check whether the surface of the product is damaged or not during transportation.
- Check the nameplate models of the drive and motor are what you have ordered.
- Cheek if it is fully equipped with accessories: power supply connector, motor connector & pins, control I/O signal connector.

- Neither the damaged nor missing accessories of stepper system is allowed to install.
- Contact Leadshine or local distributor if any failure was found.

1.3.2 Nameplate information

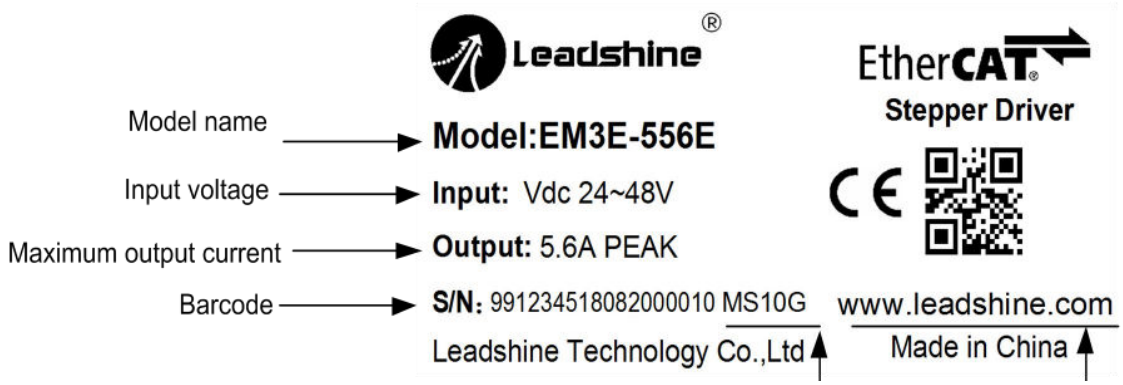

1.3.3 Part number

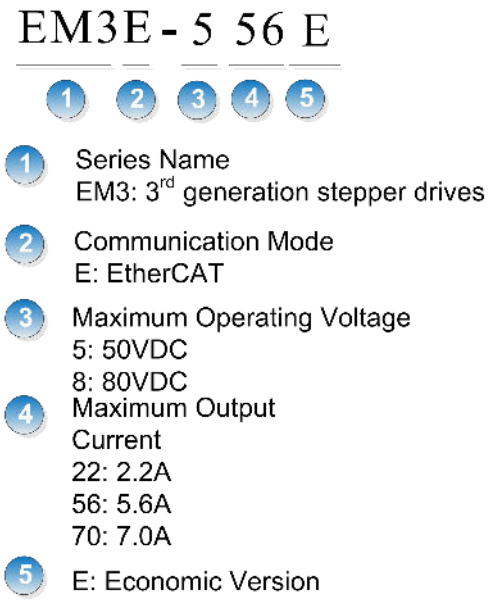

1.3.4 Parts description

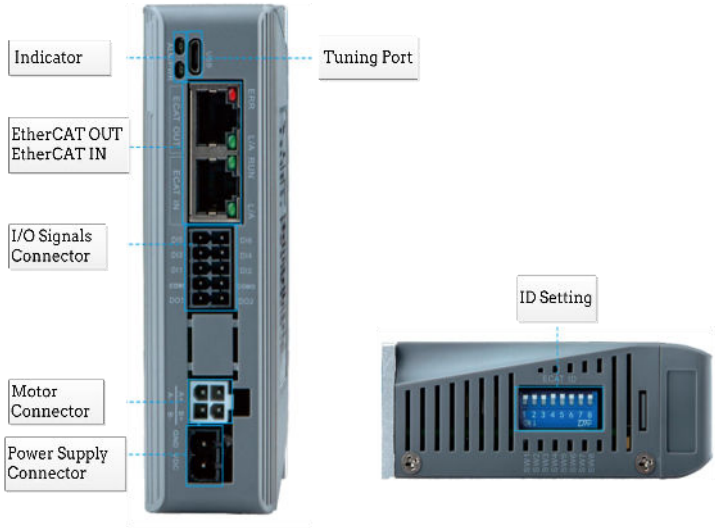

1.3.5 Accessory Cables

Name	Necessary	Picture	Description	Model
Tuning Cable	No		Micro-USB cable	CABLE-MUSB1M5
Network cable	Yes, can use 3rd party cable		Optional length: 0.1m, 0.2m, 0.3m, 0.4m, 1m, 1.5m, 2m, 3m,5m,7m, 10m,15m, 20m	CABLE-TX *M*-BUS

Note:

(1) Tuning cable is not necessary, but it is recommended to order.

(2) Network cable is necessary, but user can also buy shielded network cable through 3rd party.

(3) Motor connector model: 39012040, 39000038, Molex

2 Installation

2.1 Storage and Installation Conditions

2.1.1 Storage condition

- Correctly packaged and store in a clean and dry environment where direct sunlight is avoided.
- Store within an ambient temperature ranging from -20℃ to +65℃.
- Store within a relative humidity ranging from 40% to 90% and non-condensed.
- Avoid any type of exposure to corrosive gases.

2.1.2 Operating ambience conditions

- Temperature ranging from 0℃ to 40℃. The ambient temperature of drive for long-term reliability should be under 40℃. Please install the drive in a well-ventilated area.
- Operation within a relative humidity ranging from 40% to 90% and non-condensed.
- Vibration lower than 0.15mm at a frequency of 10Hz-55Hz.

- DO NOT mount the drive and motor in a location subjected to corrosive or flammable gases, and combustibles.
- Please mount the drive and motor in an indoor electric control cabinet without liquid where direct sunlight is avoided.
- DO NOT mount the drive and motor in a location subjected to airborne dust.
- Please ensure grounding wires are securely connected

2.2 Dimensions

Unit: mm, 1inch=25.4mm

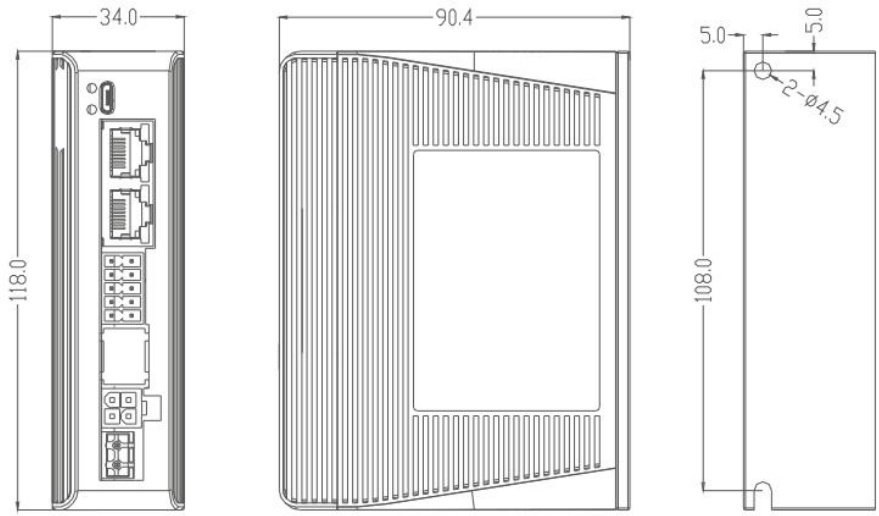

Figure 2.1: EM3E-522E/556E/870E Mechanical Drawing

2.3 Installation Direction and Space

- The mounting of drive, wiring and motor should be under the regulations of EN 61800-5-1.
- Incorrect installation may result in a drive malfunction or premature failure of the drive and /or motor. Please follow the guidelines in this manual when installing
- The drive should be mounted perpendicular to the wall or in the control panel.
- In order to ensure the drive is well ventilated, ensure that the all ventilation holes are not obstructed and

sufficient free space is given to the drive, and a cooling fan is mounted in the control panel.

- Please ensure grounding wires are securely connected.

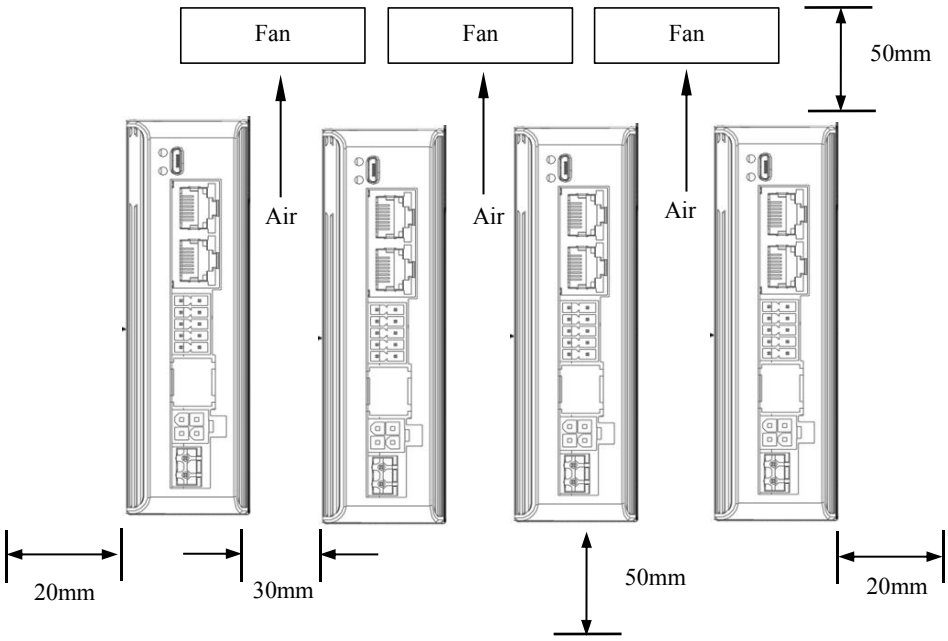

Figure 2.2: EM3E series installation drawing

3 Production Specifications

3.1 Electrical and Operating Specifications

3.1.1 EtherCAT Specifications

Name	Description
Physical Layer	Ethernet-100BASE-TX
Communication Connector	RJ45: EtherCAT Input and EtherCAT Output Micro-USB: Tuning port
Topology	Line, Tree
Baud Rate	100Mbps (full-duplex-channel)
Frame Data Length	1484 bytes (Max)
Synchronization Manager	SM0：email received (from master station to slave station)slave SM1：email sent (from slave station to master station) SM2：process data output (from master station to slave station) SM3：process data input (from slave station to master station)
Supported Protocol	CoE：CANopen over EtherCAT
Synchronization mode	DC Synchronization (SYNC0) Free Run
Communication Event	SDO, PDO, EMCY
Application Layer Specifications	IEC61800-7 CiA402 Drive Profile
Supported Operation Mode	Cyclic Synchronous Position Mode (CSP) Profile Position Mode (PP) Profile Velocity Mode (PV) Homing Mode (HM)
Cycle Time	500us, 750us, 1ms, 2ms, 3ms, 4ms, 5ms

3.1.2 Electrical and Operating Specifications

Name	EM3E-522E	EM3E-556E	EM3E-870E
Supply Voltage	20-50VDC	20-50VDC	20-80VDC
Output Current (Peak)	0.3-2.2A	1.0-5.6A	1.0-7.0A
Size (H*W*L mm)	118*90.4*34		
Weight (kg)	0.28		
Matched Motor	NEMA 11, 14, 17	NEMA 17, 23, 24	NEMA 23, 24, 34
Input Signals	Home Switch, Positive Limit, Negative Limit, Quick Stop, Touch Probe, GPIOs		
Output Signals	Brake, Alarm		
Protection Functions	Over Current, Over Voltage, etc.		
PC Software	Leadshine Motion Studio		

Operating Environment	Environment	Avoid dust, oil ,fog and corrosive gases
	Operating Temperature	0-40℃ (32 F – 104 F)
	Storage Temperature	-20℃-65℃ (-4 F – 149 F)
	Humidity	40-90%RH
	Vibration	10-55Hz/0.15mm
	Mount	Vertical or horizontal mounting

3.2 Cable Specifications

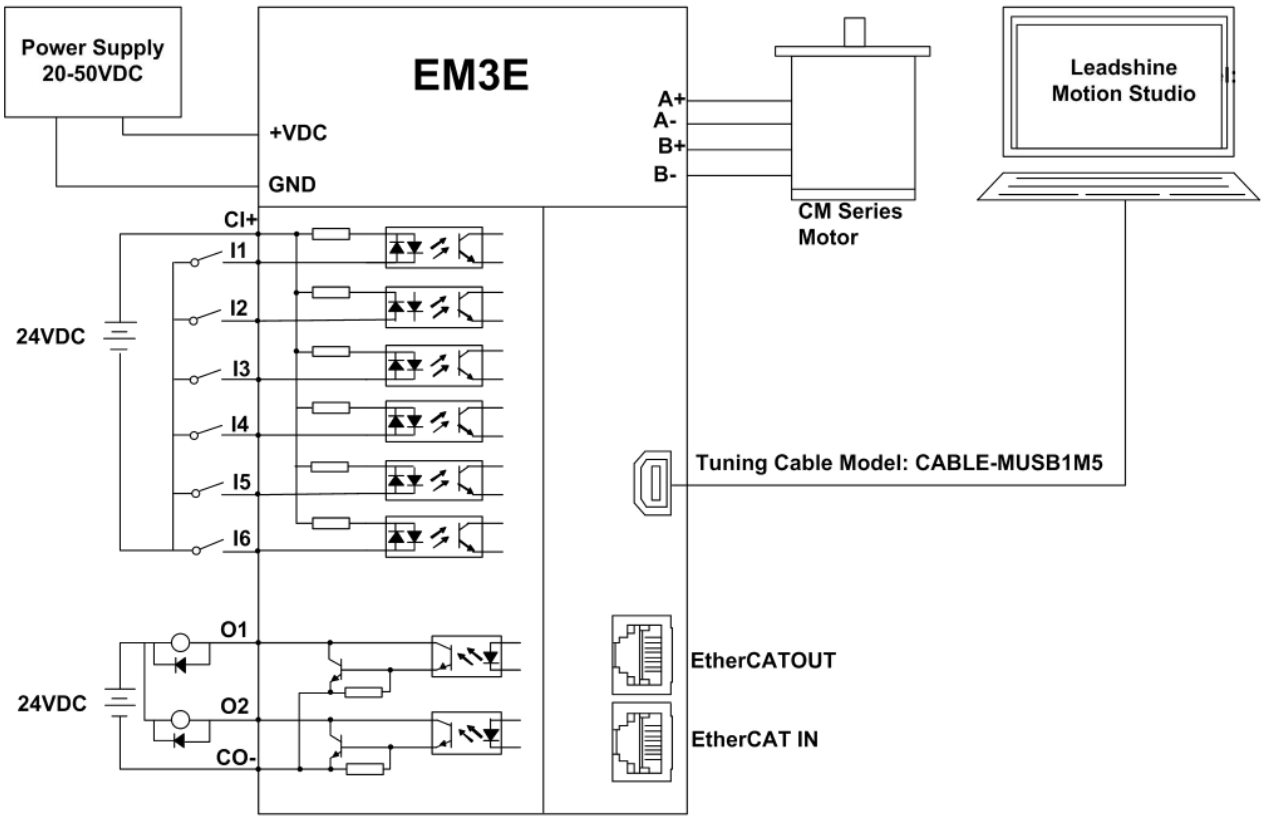

Note:

- There are two EtherCAT communication ports above, one of them is input port which connects with master station or previous slave, and the other is output port which connects with the following slave.
- Single-end input I1 - I6 connection types can be common-cathode and common-anode.

3.2.1 Power Supply Cable & Motor Cable

- Wire diameter: VDC, GND, A+, A-, B+, B- terminal wire diameter≥0.3mm^2 (AWG15-22)

3.2.2 I/O Signal Cable

- Wire diameter: I/O signal wires diameter≥0.12mm^2 (AWG24-26)
- Recommend to adopt shielded twisted pair cable with a length of less than 3 meters (the shorter the better).
- Wiring: As far as possible away from the power line wiring, in order to prevent interference
- Please connect surge absorber to inductive device, such as anti-parallel diode for DC coil, parallel RC-snubbers circuit for AC coil.

3.2.3 EtherCAT Communication Cable

Single-core cables can be used for fixed applications, while multi-core cables are recommended for flexible applications

- **Specifications**

Item	**Type A (Cable-fixed)**	**Type B (Cable Flexible)**
Cross-sectional area	AWG 22/1(Single solid root)	AWG 22/7 (7x0.254mm)
Nominal/characteristic impedance (tolerance)	100Ω (15Ω)(IEC61156-5)	
Balanced or Unbalanced	Balanced	
Loop resistance	≦115Ω/Km	
Insulation resistance	≧500MΩ/Km	
Transmission impedance	≦50mΩ/m(10MHZ)	
Maximum time delay	≦550ns/100m	
Time delay deviation	≦20ns/100m	
Shielding	S/FTQ (Outer stranded shield/inner layer)	
Temperature	≦60º	

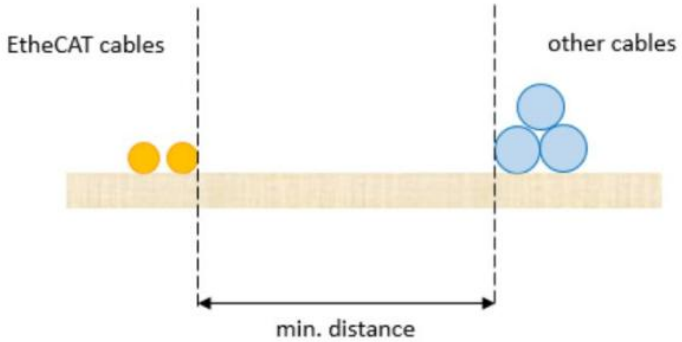

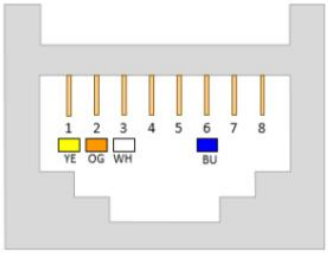

- **Requirements:**

(1) It is recommended to use a Category 5 Fast Ethernet cable with double shielding or better,
(2) The length between two nodes is recommended to not exceed 100 meters.

3.3 Connectors Specifications

3.3.1 Connectors Definition

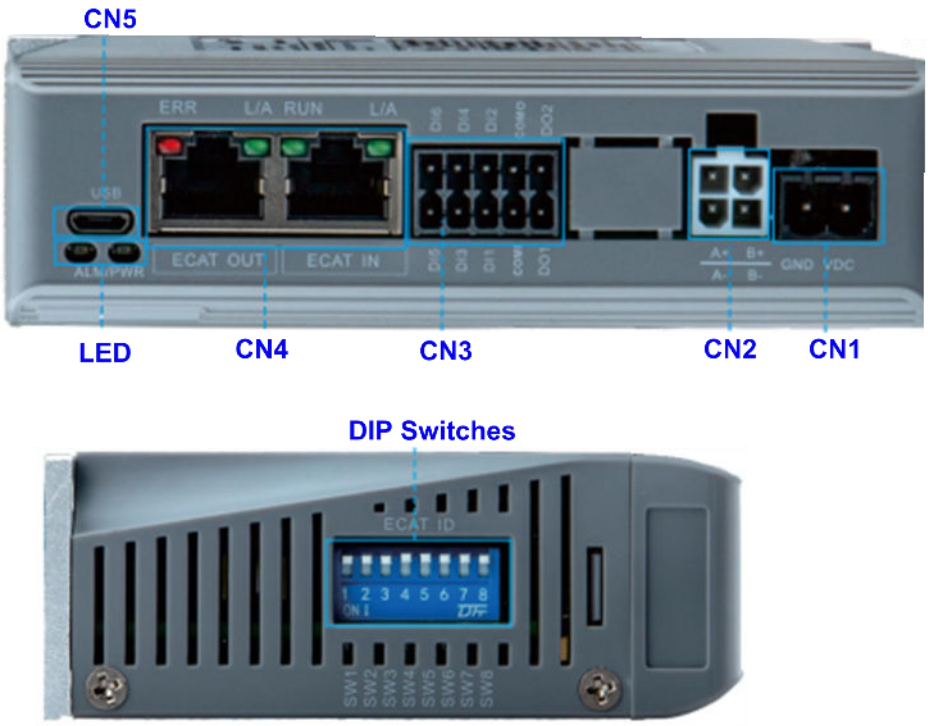

Figure 3.2: EM3E series connectors

Name	Description
CN1	Input power connector
CN2	Motor connector
CN3	I/O signals connector
CN4	EtherCAT communication connector
CN5	Micro-USB tuning connector
LED	The LED for the drive's running status
DIP Switches	8-bits switches: SW1 - SW7 to set 0-127 Node ID, SW8 for self test

3.3.2 CN1-Input Power Connector

Name	Pic	PIN	Signal	Description
CN1		1	VDC	20- 50V
		2	GND	GND

3.3.3 CN2-Motor Connector

Name	Pic	PIN	Signal	Description
CN2	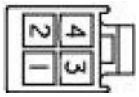	4	A+	Motor phase A+
		2	A-	Motor phase A-
		3	B+	Motor phase B+
		1	B-	Motor phase B-

3.3.4 CN3-I/O Signals Connector

Name	Pic	PIN	Signal	I/O	Description
CN3	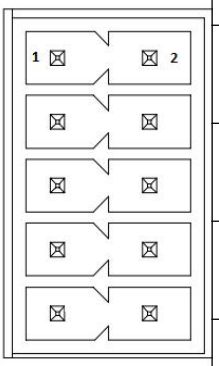	1	DI5	I	Configurable Single-ended Digital Input 5,12V - 24V, 10KHz, Negative Limit (default)
		2	DI6	I	Configurable Single-ended Digital Input 6, ,12V - 24V, 10KHz, GPIO
		3	DI3	I	Configurable Single-ended Digital Input 3,12V - 24V, 10KHz, Home Switch (default)
		4	DI4	I	Configurable Single-ended Digital Input 4,12V - 24V, 10KHz, Positive Limit (default)
		5	DI1	I	Configurable Single-ended Digital Input 1,12V - 24V, 10KHz, Touch Probe 1 (default)
		6	DI2	I	Configurable Single-ended Digital Input 2,12V - 24V, 10KHz, Touch Probe 2 (default)
		7	COMI	I	Common anode of external input signals
		8	COMO	O	Common ground of digital output signals
		9	DO1	O	Configurable Single-ended Digital Outputs 1, OC output, Max. 30V/100mA. Alarm output (default)
		10	DO2	O	Configurable Single-ended Digital Outputs 2, OC output, Max. 30V/100mA. Brake output (default)

Remark:

(1) I/O interface and corresponding parameter setting refer to chapter 4.3

(2) In Leadshine MotionStudio, digital input(DI) and digital output(DO) are displayed as SI and SO.

3.3.5 CN4-EtherCAT Communication Connector

Name	Pic	PIN	Signal	Description
CN4	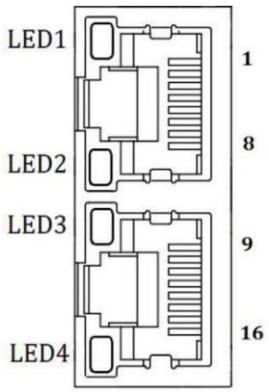	1, 9	E_TX+	EtherCAT TxD+
		2, 10	E_TX-	EtherCAT TxD-
		3, 11	E_RX+	EtherCAT RxD+
		4, 12	/	/
		5, 13	/	/
		6, 14	E_RX-	EtherCAT RxD-
		7, 15	/	/
		8, 16	/	/
		Cover	PE	Shield earthing
Note	(1) LED1 as'Link/Activity IN' indicator, green (2) LED3 as'Link/Activity OUT' indicator, green (3) LED2 as'RUN' indicator, green (4) LED4 as'ERR' indicator, red			

Table 3.3 Link/Activity LED status

Name	Color	Status	Description
RUN	Green	off	Initialization Status
		Blinking	Pre-operation status
		Single Flash	Safe operating status
		on	Operation Status
ERR	Red	Refer to Chapter 5.2	
L/A IN	Green	off	Physical layer link cannot be established
		on	Physical layer link establishment
		Blinking	Interaction data
L/A OUT	Green	off	Physical layer link cannot be established
		on	Physical layer link establishment
		Blinking	Interaction data

3.3.6 CN5-Micro-USB Tuning Port

Name	Pic	PIN	Signal
CN5	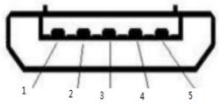	1	GND
		2	Reserved
		3	Data+
		4	Data-
		5	V_Bus

3.3.7 DIP Switches- SW1-SW8

There are 8-bit DIP switches in EM3E series drives, SW1-SW7 are used to set slave ID, SW8 is used for self-test.

(1) SW1-SW7 for Slave ID

The slave ID (also called Site Alias) of EM3E series can be set by the following 3 methods:

2151h	2150h	DIP Switches	Slave ID
0	Read ID	0~127	Setting by DIP Switches SW1-SW7
1	Write ID	-	Setting by writing a value to 2050h
2	-	0	Configure to EEPROM 0004h of ESC automatically.

- **When 2151h=0, setting via DIP Switches SW1-SW7**

SW1	SW2	SW3	SW4	SW5	SW6	SW7

Slave ID can be set a value non-zero via the SW1-SW7, activated after restarting the power supply. The specific definition is as below:

ID	SW1	SW2	SW3	SW4	SW5	SW6	SW7
0	ON	ON	ON	ON	ON	ON	ON
1	OFF	ON	ON	ON	ON	ON	ON
2	ON	OFF	ON	ON	ON	ON	ON
3	OFF	OFF	ON	ON	ON	ON	ON
---	---	---	---	---	---	---	---
126		OFF	OFF	OFF	OFF	OFF	OFF
127	OFF	OFF	OFF	OFF	OFF	OFF	OFF

OFF=1, ON=0
ID = SW1*(1)+ SW2*(2)+SW3*(4)+SW4*(8)+SW5*(16)+SW6*(32)+SW7*(64)

- **When 2151h=1, setting via Object (2150h)**

The value written in Object (2150h) is as the slave ID, activated after saving parameter and restarting the power supply.

- **When 2151h=2, master configure ID to ESC(EtherCAT slave Controller)**

Setting all SW1-SW7 to ON, the EtherCAT master will configure slave ID to the address of EEPROM 0004h of ESC automatically.

(2) SW8 for Self Test

SW8 is used for self-test, when SW8=OFF, self-test is disabled, when SW8=ON, self-test is activated, the motor will run at a speed of 0.2r/s, back and forth 5 circles.

3.4 I/O Signals Wiring

3.4.1 Digital Input Wiring

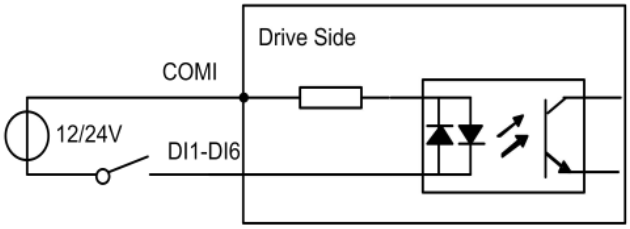

COMI: can be connected to 12 / 24 V (common-anode or common-cathode)

Figure 3.4: Input Interface Connection

Note:
(1) Controller/PLC/Control card should provide input DC power 12-24V, current ≥ 100mA.

(2) If the polarity of input DC power is reversed, the EtherCAT stepper drive won't work; you need to turn the wiring.

3.4.2 Digital Output Wiring

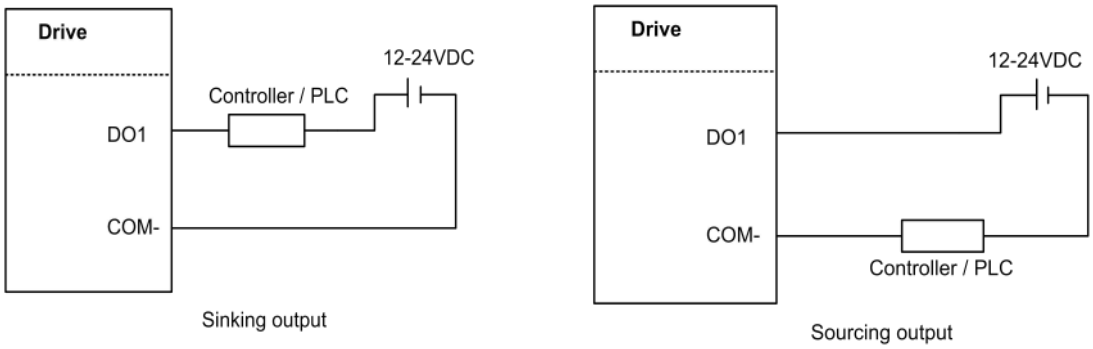

Figure 3.5: Output Interface Wiring

Note:
(1) The power supply (12-24VDC) above is provided by user, and if the polarity of power supply is reversed, it will damage the drive.

(2) Digital output is OC output with the maximum capacity of 100mA/30V (recommended 50mA/25V), the provided power supply should be under 30V (recommended 24V), otherwise it will cause damage to the drive.

3.4.3 Brake Output Wiring

This driver has a special brake output, built-in a fly-wheel diode, driving current up to 500 mA, can directly drive the motor brake without relays. The connection is below:

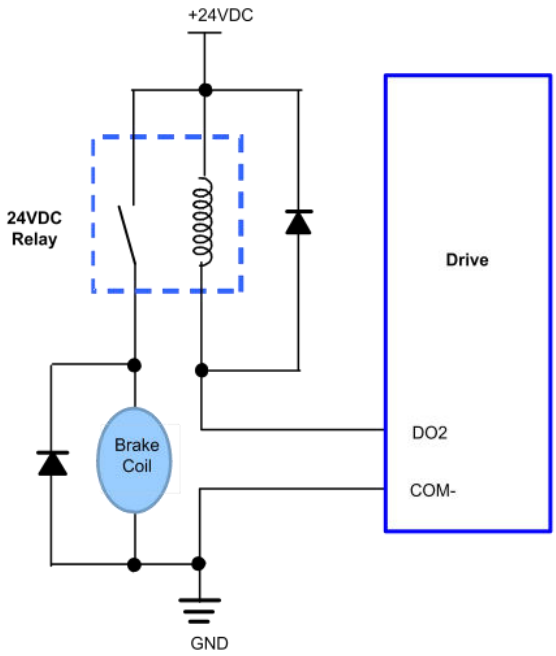

Figure 3.6: Brake output connection

4 EtherCAT Object Dictionary

4.1 Communication Object

The EM3E Series drives follows the EtherCAT standard protocol, can communicate with the master stations which also supports the EtherCAT standard protocol.

The parameters can be configured by master station's PC software or Leadshine Motion Studio.

Index	Sub-index	Name	Access	Type	Range	Default Value	Unit	Remark
1000	0	Device type	R	UINT	0-32767	0x40912	-	Refer to CIA 402 profile
1001	0	Error register	R	USINT	0-255	0	--	Refer to Chapter 5.1
1008	0	Device name	R	UINT	0-32767	DM3C-X	-	DM3C-EC522---->EM3E-522E DM3C-EC556---->EM3E-556E DM3C-EC870---->EM3E-870E
1010	00	Number of sub-index	R	UINT	0-32767	4	-	-
	01	Save all parameters	R/W	UDINT	0-0xFFFFFFFF	0	-	Need to write 0x65766173 or 1702257011 (decimal) into sub-index. It will return 1 if save successfully
	02	Save communication parameters	R/W	UDINT	0-0xFFFFFFFF	0	-	
	03	Save motion parameters	R/W	UDINT	0-0xFFFFFFFF	0	-	
	04	Save factory parameters	R/W	UDINT	0-0xFFFFFFFF	0	-	
1011	00	Number of sub-index	R	UINT	0-32767	4	-	-
	01	Restore all parameters to default setting	R/W	UDINT	0-0xFFFFFFFF	0	-	Need to write 0x64616f6c or 1684107116 (decimal) into sub-index. It will return 1 if save successfully
	02	Reset communication parameters to factory setting	R/W	UDINT	0-0xFFFFFFFF	0	-	
	03	Reset motion parameters to factory setting	R/W	UDINT	0-0xFFFFFFFF	0	-	
	04	Reset user parameters to factory setting	R/W	UDINT	0-0xFFFFFFFF	0	-	
1018	00	Number of sub-index	R	UINT	0-32767	4	-	-
	01	Vendor ID	R	UINT	0-32767	4321	-	Leadshine code
	02	Product code	R	UINT	0-32767	8X00	-	X=1---->EM3E-556E X=2---->EM3E-870E X=3---->EM3E-522E
	03	Revision number	R	UINT	0-32767	1	-	-
	04	Series number	R	UINT	0-32767	1	-	-
1600	0	Number of sub-index	R/W	UINT	0-32767	3	-	Default number of 1st mapping object

	01-08	1st RXPDO-Map object	R/W	UDINT	0-0xFFFFFFFF	-	-	Default number of 1st RXPDO-Map object
1601	0	Number of sub-index	R/W	UINT	0-32767	6	-	Default number of 2nd mapping object
	01-08	2nd RXPDO-Map object	R/W	UDINT	0-0xFFFFFFFF	-	-	Default number of 2nd RXPDO-Map object
1602	0	Number of sub-index	R/W	UINT	0-32767	5	-	Default number of 3rd mapping object
	01-08	2nd RXPDO-Map object	R/W	UDINT	0-0xFFFFFFFF	-	-	Default number of 3rd RXPDO-Map object
1603	0	Number of sub-index	R/W	UINT	0-32767	7	-	Default number of 4th mapping object
	01-08	3rd RXPDO-Map object	R/W	UDINT	0-0xFFFFFFFF	-	-	Default number of 4th RXPDO-Map object
1A00	0	Number of sub-index	R/W	UINT	0-32767	7	-	Default number of 1st mapping object
	01-08	1st TXPDO-Map object	R/W	UDINT	0-0xFFFFFFFF	-	-	Default number of 1st TXPDO-Map object
1A01	0	Number of sub-index	R/W	UINT	0-32767	0	-	Default number of 2nd mapping object
	01-08	2nd TXPDO-Map object	R/W	UDINT	0-0xFFFFFFFF	-	-	Default number of 2nd TXPDO-Map object
1C00	0	Number of sub-index	R	UINT	0-32767	4	-	-
	01	Output type of email	R	UINT	0-32767	1	-	-
	02	Input type of email	R	UINT	0-32767	2	-	-
	03	Output type of process data	R	UINT	0-32767	3	-	-
	04	Input type of process data	R	UINT	0-32767	4	-	-
1C12	0-04	RXPDO assign	R/W	UINT	0-32767	1600	-	-
1C13	0-02	TXPDO assign	R/W	UINT	0-32767	1A00	-	-
1C32	0-0A	RXPDO administrative parameters	R	UINT	0-32767	-	-	-
1C33	0-0A	TXPDO administrative parameters	R	UINT	0-32767	-	-	-

4.2 Manufacture Specific Object

Index	Sub-index	Name	Access	Type	Range	Default value	Unit	Remark
2000	00	Peak current	R/W/S	DINT	100-7000	1000	mA	Drive's max output current.
2001	00	Microstep resolution	R/W/S	DINT	200-51200	10000	Pulse	Required number of pulse to rotate 1 revolution of motor
2007	00	Action when disabled	R/W/S	UINT	0-1	0	-	0: Don't respond to commands, and the motor shaft is not locked; 1: Don't respond to commands, but the motor shaft is locked;
2010	01	Internal filtering time	R/W/S	UINT	0-32767	100	0.1ms	Internal smoothing time for control command.
2012	00	Soft-starting time	R/W/S	UINT	10-3000	1	ms	Internal smoothing time for starting current.
2013	00	Auto-tuning at power on	R/W/S	UINT	0-2	1	--	1: Yes. 0: No
201A	01	Locking current percentage of power on	R/W/S	UINT	0-100	100	%	Usually keep the default value.
201B	00	Locking duration time	R/W/S	UINT	0-1500	200	ms	Appropriately reduce this value if you want to shorten the time of locking shaft.
201C	00	Max time to close brake	R/W/S	UINT	100-10000	1000	ms	Usually keep the default value
201D	00	Zero speed point	R/W/S	UINT	0-500	10	0.1r/s	-
2047	00	Over voltage point	R/W/S	UINT	0-1000	75	V	EM3E-870E is 120V
2048	00	Bus-voltage	R	UINT	0-65535	-	V	-
2051	00	Motor running direction	R/W	DINT	0-255	0	--	Valid when 0x225C= 0; 0: CCW direction 1 or 4: CW direction
2056	00	Alarm detection selection	R/W/S	DINT	0~65535	65535	--	Bit setting: =1: Yes; =0: No Bit0: over-current (invalid) Bit1: over-voltage
2090	01	Current loop Kp	R/W	DINT	0~32767	1500	--	--
	02	Current loop Ki	R/W	DINT	0~32767	300	--	--
	03	Current loop Kc	R/W	DINT	0~32767	300	--	--
2150	00	Slave ID	R/W/S	UINT	0-256	1	--	Valid when 0x2151= 1;
2151	00	Slave ID resource	R/W/S	UINT	0-10	0	--	0: DIP switches 1: Setting by 0x2150 2: ESC
2232	00	Synchronous compensation1	R/W	DINT	0—65535	2	-	
2233	00	Synchronous compensation2	R/W	DINT	0—65535	100	-	
225C	00	Special function register	R/W	DINT	0~32767	0	--	Bit1=1: Set motor running direction by 0x607E Bit2=1: Set virtual input by 0x5012-03

22A9	00	Limit Mode	R/W	DINT	0-10	0	--	0: Stop normally 1: Invalid 2: Alarm, error code 260
22B4	00	Quick stop selection	R/W	DINT	0~32767	0	--	0: Alarm, error code 570, 1: Refer to 0x605A
22BA	00	Holding time	R/W	UINT	10~3000	200	ms	How long after the current switch to standby current
22BB	00	Holding current percentage	R/W	UINT	0~100	50	%	The percentage of current to peak current during standby time
22C2	01	JOG acceleration	R/W	UINT	0~32767	200		
	02	JOG speed	R/W	UINT	0~32767	60		
	03	JOG distance	R/W	UINT	0~32767	0		
	04	JOG cycles	R/W	UINT	0~32767	1		
	05	JOG direction	R/W	UINT	0~32767	0		
	06	JOG preparation time	R/W	UINT	0~32767	100	ms	
3100	01	Control software version	R	UINT			--	
	02	Firmware version	R	UINT			--	
	03	EtherCAT protocol version	R	UINT			--	
3FFE	01-0E	Alarm record	R	USINT	0~32767	--	--	0x3FFE+01 is the current error code (current alarm) or the most recent error code (currently no alarm); 0x3FFE+02-0E are followed by the historical error code.
4003	01	Delay of closing brake	R/W/S	UINT	0-1500	250	ms	
4003	02	Delay of loosening brake	R/W/S	UINT	0-1500	250	ms	
4003	03	Max speed to close brake	R/W/S	UINT	0-500	10	0.1r/s	
5000	01	Trajectory generator	R	UINT	0~32767	1	--	Internal protocol stack parameters
	02	Motion state machine	R	UINT	0~32767	0	--	0: Disabled 0x9A9A: Enabled
	03	Internal enable state	R	UINT	0~32767	0	--	0: Disabled 1: Enabled
	04	Reach the target state	R	UINT	0~32767	--	--	Bit0=0: Not reach Bit0=1: Reach Bit1=0: No stall Bit1=1: Stalled
5002	01	ESC ID	R/W	UINT	0~32767	0	--	Write 0, return the ID data in ESC to 0x5002-02； Write 0x12, return the current ID setting by DIP switches
	02	ESC data	R	UINT	0~32767	408	--	Return ID data
5004	01-0E	Sync0 Synchronization interface parameters	R	UINT	0~32767	--	--	--

	0F	Sync0 Synchronization interface parameters	R/W	UINT	0~32767	--	--	Bit0 =1: RPDO mapping can't be written by SDO; Bit0 =0: RPDO mapping can be written by SDO; Bit1=1: Detect the number of PDO mapping; Bit1=1: Don't detect the number of PDO mapping; Bit2=1: Send 0xF directly to enable; Bit2=0: Send 0xF can't be enabled.
5005	00	DC compensation base value	R/W	UINT	0~32767	500	--	--
5006	00	Synchronization error detection	R/W	UINT	0~32767	0	--	--
5010	00	Effective input and output watchdog time	R/W	UINT	0~32767	0	--	--
5011	00	Internal actual location	R	UDINT	0~32767	--	--	--
5012	01	Homing arrival position	R/W	DINT	0~32767	0	--	--
	02	Homing trigger position	R/W	DINT	0~32767	0	--	--
	03	Homing virtual input	R/W	UDINT	0~32767	0	--	When 0x225C=4, activate the virtual input function; 60FD different bits, corresponding to different virtual inputs; Inputs: Bit of 60FD Probe signal 1: Bit 26=1 Home switch: Bit 2=1 Positive limit: Bit 1=1 Negative limit: Bit 0=1 For example: 0x225C=4 and start homing, set 0x5012-03=4, home switch input; set 0x5012-03=2, Positive limit input; set 0x5012-03=2, Negative limit input
	04	Homing setting	R/W	UINT	0~32767	5	--	Bit0=0: Homing protection is not turned on; Bit0=1: Homing protection is turned on; (Homing protection: when start homing, If the limit signal takes effect, bit0=0 means homing normally, bit0=1 means stop homing as limit protection) Bit2=0: The value of current position after in position = 0x607C; Bit2=1: The value of 0x607C is used as the motion offset, and finally 0x6064 = 0; Bit3=0: 0x6064= 0x607C after in position; Bit3=1: 0x6064 = 0x607C after in position;
5015	05	Protocol setting	R/W	UINT	0~32767	255	--	Bit8 is used to select whether the speed arrival in PV mode comes from bit0 of 0x5000-04 or bit8 of 0x5000-04.
5400	01	Minimum synchronization period	R/W	UINT	250~2000	250	us	--
	02	Maximum synchronization period	R/W	UINT	250~20000	10000	us	--

5503	04	Special function register	R/W	UINT	0~65535	2	--	Bit0 = 0: Asynchronous mode, the host will track 0x607A-00 in real time; Bit0=1: Asynchronous mode, the host does not track 0x607A-00in real time.

4.3 I/O Configuration Object

The configuration of input ports includes three parts: function setting, filter time and polarity setting. Therefore, **the relevant object dictionary value (Decimal) = Input port function setting value + Filter time setting value + Input port polarity setting value.**

The configuration of output ports includes two parts: function setting and polarity setting. Therefore,**the relevant object dictionary value (Decimal) = Output port function setting value + Output port polarity setting value.**

It is recommended to use Leadshine free tuning software MotionStudio for parameter settings, which will be very simple. In Leadshine MotionStudio, digital input(DI) and digital output(DO) are displayed as SI and SO.

4.3.1 Input Ports Function Value

Index	Sub-index	Name	Access	Type	Range	Default value	Unit	Remark
2152	01	Input1 function	R/W/S	DINT	0-65535	0x17 (Decimal 23)	--	Default is touch probe1, take effect changes need restart power
	02	Input2 function	R/W/S	DINT	0-65535	0x18 (Decimal 24)	--	Default is touch probe2, take effect changes need restart power
	03	Input3 function	R/W/S	DINT	0-65535	0x16 (Decimal 22)	--	Default is home switch, take effect changes need restart power
	04	Input4 function	R/W/S	DINT	0-65535	0x01 (Decimal 1)	--	Default is positive limit, take effect changes need restart power
	05	Input5 function	R/W/S	DINT	0-65535	0x02 (Decimal 2)	--	Default is negative limit, take effect changes need restart power
	06	Input6 function	R/W/S	DINT	0-65535	0x19 (Decimal 25)	--	Default is user defined, take effect changes need restart power

Note:

(1) After configuring the input and output functions through the master station software or MotionStudio, it needs to save and restart the power to take effect.

(2) If the function configuration of the two input ports is repeated, the input port with the smaller number is valid, and the other input port will be set to GPIO automatically. For example: SI3 and SI4 are configured as positive limit, after saving and restarting, SI3 function as positive limit, SI4 function as GPIO.

There are two object dictionaries that can be used to monitor input ports:
0x2155 is used to monitor whether the input port is connected to a valid signal;
0x60FD is used to monitor whether the input port is configured with a function

- **0x2155 Corresponding Input Port Table:**

Input port	Index +Sub index	Default Function Value	Default Function	Physical State Read State1 (3)
IN1	0x2152+01 (1)	0x17	Probe1	0x2155.00=1 (2)
IN2	0x2152+02	0x18	Probe2	0x2155.01=1
IN3	0x2152+03	0x16	Home Switch (ORG)	0x2155.02=1
IN4	0x2152+04	0x01	Positive limit (POT)	0x2155.03=1
IN5	0x2152+05	0x02	Negative limit (NOT)	0x2155.04=1
IN6	0x2152+06	0x19	GPIO (SI-MON)	0x2155.05=1

Note:

(1) 0x2152+01 indicates that the index is 0x2152, and sub-index is 01.

(2) 0x2155.01 indicates that the index is 0x2155, and bit is bit1.

(3) **Read State1:** when IN1~IN6 inputs are valid, at this time, it has nothing to do with whether the function is configured, bit0~bit5 of 0x2155 will change to value 1. For example, when only IN5 input port is valid, bit 4 of 0x2155 will be value 1, then 0x2155=F (Decimal 16).

- **0x60FD Corresponding Function Table:**

Input Function	Setting Value	Logic state Read state2 (1)
Invalid	0x00	-
Probe1	0x17 (Decimal 23)	0x60FD.26=1
Probe2	0x18 (Decimal 24)	0x60FD.27=1
Home switch (ORG)	0x16 (Decimal 22)	0x60FD.02=1
Positive limit (POT)	0x01 (Decimal 1)	0x60FD.01=1
Negative limit (NOT)	0x02 (Decimal 2)	0x60FD.00=1
Quick Stop (EMG)	0x14 (Decimal 20)	0x60FD.23=1
GPIO (SI-MON)	0x19 (Decimal 25)	When IN1 is set to GPIO → 60FD.04=1 When IN2 is set to GPIO → 60FD.05=1 When IN3 is set to GPIO → 60FD.06=1 When IN4 is set to GPIO → 60FD.07=1 When IN5 is set to GPIO → 60FD.08=1 When IN6 is set to GPIO → 60FD.09=1

Note:

(1) **Read State2:** when inputs function are valid, at this time, it has nothing to do with which input port, bit0~bit26 of 0x60FD will change to value 1. For example: when IN5 input port is set to POT and input signal is valid, then bit0 of 0x60FD will be value 1.

(2) When input function is set to GPIO, at this time, different input ports correspond to different bit of 0x60FD.

4.3.2 Input Ports Filter Time & Polarity Value

Filter Time	Setting Value (Decimal)
1ms	0
2ms	256
3ms	512
4ms	768
5ms	1024
6ms	1280
8ms	1536
10ms	1792
15ms	2048
20ms	2304
30ms	2560
40ms	2816
50ms	3072
100ms	3328
200ms	3584
500ms	3840

Polarity	Setting Value
Normally open (NO)	0
Normally closed (NC)	128
-	

Therefore, Value of 0x2152 (Decimal) = Input port function value + Filter time value + Polarity value.

For Example:

1. IN1 needs to be set as quick stop function, filtering time is 20ms and polarity is NC:
   0x2152+01 = 20+128+2304=2452(0x994)
2. Need to set the polarity of IN3, IN4, IN5 to NC:
   0x2152+03 =128+22 =150(0x96)
   0x2152+04 =128+1 =129(0x81)
   0x2152+05 =128+2 =130(0x82)

4.3.3 Output Ports Function & Polarity Value

Index	Sub-index	Name	Access	Type	Range	Default value	Unit	Remark
2155	00	Digital I/O status	R	DINT	0-65535	0	--	Upper 8 bits indicate the status of digital outputs
2156	01	Output1 function	R/W/S	DINT	0-65535	0x01	--	Default is alarm output, take effect changes need restart power
	02	Output2 function	R/W/S	DINT	0-65535	0x03	--	Default is brake output, take effect changes need restart power

More detail:

Output Port Function	**Setting Value**		**Polarity**	**Setting Value**
Reserved	0		Normally open (NO)	0
Alarm (ALM)	1		Normally closed (NC)	128
Servo-on (Ready)	2 (invalid)		-	
Brake (BRK)	3			
In-position (INP)	4 (invalid)			
Main control output	5			

Therefore, Value of 0x2156 (Decimal) = Output port function value + Polarity value.

For Example:

OUT1 needs to be set as alarm function and polarity is NC:

0x2156+01= 1+128=129(0x81)

4.3.4 Main Control Output Function

Main control output is also called general output and User-defined output, and its usage is as follows:

Name	**Index+ Sub-index**	**Polarity**		**Open main control output (60FE+01)**	**Enable main control output (60FE+02)**
		NO	NC		
OUT1	2156+01	0x05	0x85	bit16 (0x10000)	bit16 (0x10000)
OUT2	2156+02	0x05	0x85	bit17 (0x20000)	bit17 (0x20000)

For example, when OUT2 is set to main control output function and polarity is NC, the operation steps are as below:

- Set Object (2156+02h) to value 0x05 to main control output function;
- Set both 60FE+01 and 60FE+02 to value 0x20000, then it is available.

4.4 Motion Objects

Index	**Name**	**Access**	**Type**	**Range**	**Default value**	**Unit**	**Remark**
603F	Error code	R	UINT	0-65535	0	--	Refer to chapter 5.2
6040	Control word	R/W	UINT	0-65535	0	--	Refer to chapter 6.1

6041	Status word	R	UINT	0-65535	0	--	Refer to chapter 6.1
605A	Quick stop type selection	R/W	UINT	0-65535	6	--	0: After stopping immediately, switch on disable state; 1: After decelerating to stops at a speed value of 0x6084, switch on disable state; 2: After decelerating to stops at a speed value of 0x6085, switch on disable state; 3: After decelerating to stops at a speed value of 0x60C6, switch on disable stat; 4: After stopping immediately, switch on quick stop state; 5: After decelerating to stops at a speed value of 0x6084, switch on quick stop state; 6: After decelerating to stops at a speed value of 0x6085, switch on quick stop state; 7: After decelerating to stops at a speed value of 0x60C6, switch on quick stop stat;
605D	Asynchronous mode halt selection	R/W	INT	0~65535	1	--	1: After decelerating to stops at a speed value of 0x6084, keep operation enable state; 2: After decelerating to stops at a speed value of 0x6085, keep operation enable state; 3: After decelerating to stops at a speed value of 0x60C6, keep operation enable state; 4: After stopping immediately, keep operation enable state.
6060	Operation mode	R/W	USINT	0-255	8	--	1: PP mode, 3: PV mode, 6: Home mode, 8: CSP mode
6061	Operation mode display	R	USINT	0-255	8	--	-
6062	Position command	R	DINT	-2147483648 ~2147483647	0	P	P: pulse
6064	Position actual value	R	DINT	-2147483648 ~2147483647	0	P	P: pulse
606B	Velocity command	R	DINT	-2147483648 ~2147483647	0	P/s	-
606C	Velocity actual value	R	DINT	-2147483648 -2147483647	0	P/S	-
607A	Target position	R/W	DINT	-2147483648 ~2147483647	0	P	Target position under PP mode
607C	Home offset	R/W	DINT	-2147483648 ~2147483647	0	P	The value of difference between senor origin position and mechanical origin position under Home mode . If the value is set to10000, it means that at homing mode 19, the motor reaches the Home switch and stops immediately, then reverses at low speed until it leaves the Home switch, at last stops at a distance of 10000P.
607D+01	Software negative limit	R/W	DINT	-2147483648 ~2147483647	0	P	New target positions are checked against these limits. The limits are relative to the machine home position, which is the result of homing. As default the software position limits are switched off. Changed values must be saved and the drive must be restarted to take enable the new the software limits.
607D+02	Software positive limit	R/W	DINT	-2147483648 ~2147483647	0	P	
607E	Motor direction	R/W	USINT	0~255	0	--	Need to set 0x225C first
60FF	Target velocity	R/W	DINT	-2147483648	0	P/S	Profile velocity under PV mode

				~2147483647			
6080	Max velocity limit	R/W/S	UDINT	-2147483648 ~2147483647	3000	rpm	
6081	Max profile velocity	R/W/S	DINT	-2147483648 ~2147483647	50000	--	Max. Allowable velocity under PP mode
6082	Start velocity	R/W/S	DINT	-2147483648 ~2147483647	0	--	Start velocity under PP mode
6083	Profile acceleration	R/W/S	DINT	-2147483648 ~2147483647	4000	P/S^2	Acceleration under PP and PV mode
6084	Profile deceleration	R/W/S	DINT	-2147483648 ~2147483647	4000	P/S^2	Deceleration under PP and PV mode
6085	Quick stop deceleration	R/W/S	DINT	-2147483648 ~2147483647	400000000	P/S^2	Deceleration of quick stop under PP, PV and Home mode
6098	Homing method	R/W/S	USINT	1-100	19	-	Methods of searching origin under homing mode, refer to Appendix A
6099+01	Fast homing velocity	R/W/S	DINT	-2147483648 ~2147483647	50000	P/S	Speed during search for limit switch signal
6099+02	Slow homing velocity	R/W/S	DINT	-2147483648 ~2147483647	25000	P/S	Speed during search for Home switch
607C	Home offset	R/W/S	DINT	-2147483648 ~2147483647	0	P	The value of difference between senor origin position and mechanical origin position under Home mode
609A	Homing acceleration	R/W/S	USINT	-2147483648 ~2147483647	25000	P/S^2	Acc / Dec velocity under Home mode
60B0	Position offset	R/W	DINT	-2147483648 ~2147483647	0	P	Position offset under PP mode
60B8	Touch probe control word	R/W	UINT	0-65535	0	-	Set touch probe function, refer to chapter 6.3
60B9	Touch probe statue word	R	UINT	0-65535	0	-	Status of touch probe 1/2, refer to chapter 6.3
60BA	Touch probe 1 positive value	R	DINT	-2147483648 ~2147483647	0	P	Data value sensed by touch probe 1 at rising edge
60BB	Touch probe 1 negative value	R	DINT	-2147483648 ~2147483647	0	P	Data value sensed by touch probe 1 at falling edge
60BC	Touch probe 2 positive value	R	DINT	-2147483648 ~2147483647	0	P	Data value sensed by touch probe 2 at rising edge
60BD	Touch probe 2 negative value	R	DINT	-2147483648 ~2147483647	0	P	Data value sensed by touch probe 2 at falling edge
60C2+01	Interpolation time period value	R/W	USINT	0-255	2	--	Only for internal tuning.
60C2+02	Interpolation time unit	R/W	SINT	-128-127	0	--	
60D5	Touch probe 1 rising edge counter	R	UINT	0-65535	0	--	Frequency for capture of touch probe 1 rising edge
60D6	Touch probe 1 falling edge counter	R	UINT	0-65535	0	--	Frequency for capture of touch probe 1 falling edge
60D7	Touch probe2 rising edge counter	R	UINT	0-65535	0	--	Frequency for capture of touch probe 2 rising edge

60D8	Touch probe 2 falling edge counter	R	UINT	0-65535	0	--	Frequency for capture of touch probe 2 falling edge
60FD	Digital input statue	R	UDINT	0-4294967296	0	--	Statue of digital input signals, refer to chapter 4.3.1
60FE+01	Open physical output	R/W/S	UDINT	0-4294967296	0	--	Able to control user output through this object, refer to chapter 4.3.4
60FE+02	Enable physical output	R/W/S	UDINT	0-4294967296	0	--	
6502	Supported operation mode	R	UDINT	0-4294967296	165	--	Operation modes the drive supported

4.5 XML File or ESI File

EtherCAT Slave Information file (XML File or ESI file) is needed to connect controller with EtherCAT Master.

This file is provided by Leadshine, described slave device information as XML format based on EtherCAT specifications. Please follow the EtherCAT Master software manual for importing method.

Some master stations require files in a specific format and do not recognize XML format, please contact the master technical engineer of master station.

5 Error Code & Trouble Shooting

When an alarm is occurred, the drive turns on the protection function and the motor stops running. EM3E has three object dictionaries that can read alarm code, and two red LED lights flash to display some of the alarm information.

5.1 Error Code

(1) Object **0x3FFE+01** indicates the current failure alarm, and other sub-index indications are historical alarms.
(2) Object **0x1001** and **0x603F** indicate the current failure alarm, The error code read by 0x603F is IEC 61800 specification; the error code read by 0x1001 is CIA specification.
(3) Error code read by some master station is displayed in decimal. At this time, please convert it to hexadecimal and then refer to the error code table as below. For example, the master station reports error code of 8721, the corresponding hexadecimal number is 0x2211, so the alarm information in the reference table is over-current alarm.

Error code table:

0x3FFE	0x603F	Description	Trouble Shooting
0x0e0	0x2211	Over-current	1. Check whether the wiring is short-circuited, or the motor is short-circuited. 2. Switch power supply alarm caused, replace other power supply for a try.
0x0c0	0x3211	Over-voltage	1. Check the voltage of power supply; 2. If over-voltage occurs in motion, the acceleration and deceleration time can be increased
0x0a0	0x3150	EEPROM error in phase A	1. Reset parameters to the factory and restart power supply 2. If it still exists, the hardware failure
0x0a1	0x3151	EEPROM error in phase B	
0x1a0	0x8402	Over-speed	1. Reduce command speed value; 2. Write 0x10 to the object 0x2056 to clear the alarm.
0x240	0x5530	Save error	1. Reset parameters to the factory and restart power supply 2. If it still exists, the hardware failure
0x260	0x7329	Limit switched alarm	Refer to 0x22A9+00
0x570	0x5441	Quick stop alarm	Refer to 0x22B4+00
0x5f0	0x7122	Auto-tuning error	1. Restart the drive; 2. If it still exists, disable auto-tuning by 0x2013
0x816	0x8216	Invalid mailbox configuration in pre-operation state	Check the network cable
0x81b	0x821B	Watchdog timeout	Check the network cable
0x836	0x8736	Invalid DC synchronization period	Decrease the value of the synchronization period or increase the value of 0x5400+02
0x870	0x5201	Unsupported operation mode	Check the value of 0x6061 and correct it to the supported operation mode;
0x801	0x8201	ESM state machine transition failed	Alarms related to the master station, without accurate solution.
0x802	0x5510	Memory overflow	
0x807	0x8207	The mapping object does not exist	
0x808	0x8208	PDO mapping object length error	
0x809	0x8209	PDO mapping object has no mapping attribute	
0x811	0xA001	Invalid ESM conversion request	
0x812	0xA002	Unknown ESM conversion request	
0x813	0x8213	Boot state request protection	
0x815	0x8215	Email configuration with invalid boot status	
0x818	0x8211	No valid input data	
0x819	0x8212	No valid output data	
0x81c	0x821C	Invalid sync manager type	
0x81d	0x821D	Invalid output configuration	

0x81e	0x821E	Invalid input configuration	
0x821	0xA003	Waiting for the initial state of ESM	
0x822	0xA004	Waiting for ESM pre-operation state	
0x823	0xA005	Waiting for ESM safe operation status	
0x824	0x8224	Invalid process data input mapping	
0x825	0x8225	Invalid process data output mapping	
0x827	0x8727	Free running mode is not supported	
0x828	0x8728	Does not support synchronous mode	
0x82b	0x8210	Invalid input and output	
0x82c	0x872C	Fatal sync error	
0x82d	0x872D	No synchronization errors	
0x82e	0x872E	Synchronization period is too small	
0x830	0x8730	Invalid DC synchronization configuration	
0x832	0x8732	DC phase locked loop failure	
0x833	0x8733	DC sync IO error	
0x834	0x8734	DC synchronization timeout	
0x835	0x8735	Invalid DC cycle	
0x850	0x5550	EEPROM inaccessible	
0x851	0x5551	EEPROM error	
0x852	0x5552	The hardware is not ready	

5.2 Alarm LED

As shown in the figure below, there are two red alarm indicator lights. ALM usually shows the drive motion alarms , and ERR shows the drive communication alarms.

ALM red light alarm indication table:

ALM flicker number	Description	Error code in 0x603F	Trouble Shooting
1	Over-current	0x2211	1. Check whether the wiring is short-circuited, or the motor is short-circuited. 2. Switch power supply alarm caused, replace other power supply for a try.
2	Over-voltage	0x3211	1. Check the voltage of power supply; 2. If over-voltage occurs in motion, the acceleration and deceleration time can be increased
4	Shaft locking error	0x7323	1.Check whether the motor wire is not connected 2.Check whether motor wiring is incorrect
5	Save parameter error	0x5530	1. Reset parameters to the factory and restart power supply 2. If it still exists, the hardware failure
6	Auto-tuning error	0x7122	1. Restart the drive; 2. If it still exists, disable auto-tuning by 0x2013

10	Quick stop error	0x5441	Refer to 0x22B4+00
11	Limit switches error	0x7329	Refer to 0x22A9+00
Always on	Hardware error	-	1. Restart power supply, 2. If it still exists, the hardware failure.

When the EM3E has a network communication failure, the Alarm LED2 flicker status and the error code in object 0x603F are listed in the following table. The part of the network communication failure can be saved and all can be cleared.

Alarm LED2 alarm indication table:

ERR flicker	Description	Error code in 0x603F	Savable	Trouble Shooting
Low frequency flicker	Invalid configuration in pre-operation state	0x8216	No	Check the network cable
	Others	-	No	-
Double flicker	Watchdog timeout	0x821B	Yes	Check the network cable
Single flicker	Sync mode error	0x871A	Yes	
	Others	-	No	

5.3 Alarm Clearing

After the EM3E drive alarms, the power should be cut off first to check the fault, especially the over-current and over-voltage faults. Some alarms (except over-voltage and over-current) can be cleared when the drive is holding on, the step is as follows:

Write 0x80 (decimal 128) to the object 0x6040 to clear the current alarm (except over-voltage and over-current);

Write 1 to the object 0x2093 to clear the historical alarm records. At this time, all sub-indexes of 0x3FFE are cleared;

6 Common Functions

6.1 Saving Parameters and Resetting Drive

To save all storable parameters into EEPROM through Object 0x1010, need to write “0x65766173” into sub-index 01h. To reset the drive to default parameters through Object 0x1011, need to write “0x64616F6C” into sub-index 01h. After writing the save command, do not turn off the power immediately, wait around 10s to ensure that all parameters have been saved successfully. The below table is the description of Object (1010h) and Object (1011h).

Table 6.1: Object (1010h) and Object (1011h)

Action	Index Sub-index	Write Command (hex)	Return Value	Description
Save Objects (2000h-5000h)	1010+04	0x65766173	Return 1	Save Manufacture Specific Objects
Save Objects (6000h)	1010+03	0x65766173	Return 1	Save Motion Objects
Save Object (1000)	1010+02	0x65766173	Return 1	Save Communication Objects
Save all Objects	1010+01	0x65766173	Return 1	Save all Objects
Restore Objects (2000h-5000h)	1011+04	0x64616F6C	Return 1	Reset Manufacture Specific Objects
Restore Objects (6000h)	1011+03	0x64616F6C	Return 1	Save Motion Objects
Restore Objects (1000h)	1011+02	0x64616F6C	Return 1	Reset Communication Objects
Restore all Objects	1011+01	0x64616F6C	Return 1	Reset all Objects

6.2 Control Word and Operation Modes

EM3E supports both synchronous mode and asynchronous mode. In the synchronous mode, master station processes trajectory planning and outputs cyclical instructions. Drives follow the planning instructions given by master station in synchronous cycle, making it suitable for synchronous motion of multiple axes. EM3E synchronous motion mode supports CSP mode. In CSP mode, master station completes trajectory planning and sends it to EM3E. The drive will execution the synchronous cyclic position instructions immediately once they has arrived. The **EM3E supports following synchronous cycles:250 us, 500 us, 750us, 1000 us, 2000 us, 4000 us, 8000 us.**

In asynchronous motion mode, master station is only responsible for sending motion parameters and control commands. EM3E drives will process trajectory planning according to the motion parameters after receives control command from master station and the movements between each axis are asynchronous. EM3E asynchronous mode includes Profile Position mode(PP), Profile Velocity mode(PV)and Homing mode(HM).

In both control modes, EtherCAT data transmission between master and slave station is achieved through object dictionary. The transmission types contain PDO and SDO and only one can be chosen in general cases. According to control needs, it is classified in three levels by data transmission real time capability and importance:

Must> Recommend > Can.

- “Must” indicates under this mode, the object dictionary has to be PDO mode;
- “Recommend” indicates under the set mode, the object dictionary is suggested to be configured as PDO mode to achieve real-time capability but SDO transmission can be allowed if the controlling is not quite demanding;
- ”Can” indicates under this mode, object dictionary data transmission is generally through SDO mode and PDO communication mode won’t be necessary.

The object dictionary of each control mode are shown as below:

Table 6.2: Objects Dictionary related to each operation mode

Operation Modes	Index + Sub-index	Name	Data Type	Access	Unit	PDO Configuration	SDO Configuration
CSP Mode (8)	6040+00	Control Word	U16	RW	—	Must	-
	607A+00	Target Position	I32	RW	P	Must	-

	6041+00	Status Word	U16	RO	—	Must	-
	6064+00	Actual Position	I32	RO	P	Must	-
	606C+00	Actual Velocity	I32	RO	P /S	Can	Can
PP Mode (1)	607A+00	Target Position	I32	RW	P	Recommend	Can
	6081+00	Max Profile Velocity	U32	RW	P	Can	Can
PV Mode (3)	60FF+00	Target Velocity	I32	RW	P	Recommend	Can
PP Mode (1) And PV Mode (3) General	6040+00	Control Word	U16	RW	—	Recommend	Can
	6083+00	Profile Acceleration	I32	RW	P/S[2]	Can	Can
	6084+00	Profile Deceleration	U32	RW	P/S[2]	Can	Can
Homing Mode (6)	6040+00	Control Word	U16	RW	—	Recommend	Can
	6098+00	Homing Method	I8	RW	—	Can	Can
	6099+01	Fast Homing Velocity	U32	RW	P /S	Can	Can
	6099+02	Slow Homing Velocity	U32	RW	P /S	Can	Can
	609A+00	Homing Acceleration	U32	RW	P /S[2]	Can	Can
	607C+00	Homing Offset	U32	RW	P	Can	Can
PP, PV and HOME Mode General	6041+00	Status Word	U16	RO	—	Recommend	Can
	6064+00	Actual Position	I32	RO	P	Recommend	Can
	606C+00	Actual Velocity	I32	RO	P /S	Can	Can
All operation modes General	60B8+00	Touch Probe Control Word	U16	RW	—	Recommend	Can
	60B9+00	Touch Probe Status Word	U16	RO	—	Recommend	Can
	60BA+00	Touch Probe 1 Positive Value	I32	RO	P	Can	Can
	60FD+00	Digital Input Status	U32	RO	—	Recommend	Can
	603F+00	Latest Error Code	U16	RO	P	Recommend	Can
Other Related	6060+00	Operation Mode	I8	RW	—	Can	Can
	60B0+00	Position Offset	I32	RW	—	Can	Can
	6082+00	Start Velocity	U32	RW	P /S	Can	Can
	6085+00	Quick Stop Deceleration	U32	RW	P/S[2]	Can	Can
	6061+00	Displayed Operation Mode	I8	RO	—	Can	Can

No matter using which operation mode, it can not be separated from the reading and writing of Control Word (6040h) and Status Word (6041h). Master and slave stations use these two object dictionaries as a medium to send instructions and monitor status. Following contents will highlight the definitions of each bit of the two object dictionaries.

The bit definition of Control Word (6040 h) is as shown in Table 6.3. The table A is about bit4, bit5, bit6 and bit8, whose definition depend on the operation mode, and mainly cover the execution, stop, etc. of each operation mode. The table B is about bit0-3 and bit7, which manages the state transition of the 402 state machine. The definition of. Status Word (6041h) is as shown in Table 6.4. The bit0 -7 mainly show the state machine transition state, while the bit8-15 mainly shows the status of execution or stop in each operation mode. The typical state transition of enable is as follows:

Initiation (00h) -> power-on (06h) -> start (07h) -> enable (0fh) -> execute or pause (depending on operation mode to send related control instructions of bit4-6 and bit8). The state transition that triggers the running control

in each control mode is shown in Table 6.5.

Table 6.3A: Control Word (6040h) Bit Definition

Bit / Mode	15-9	8	6	5	4
General	-	Pause	Depending on the operation mode		
CSP mode (8)	-	Invalid	Invalid	Invalid	Invalid
PP mode (1)	-	Deceleration stop	Absolute / Relative	Immediate trigger	New position point
PV mode (3)	-	Deceleration stop	Invalid	Invalid	Invalid
HM mode (6)	-	Deceleration stop	Invalid	Invalid	Starting motion

Table 6.3B: Control Word (6040h) Bit Definition

Bit / Mode	7	3	2	1	0	Type value	Action
General	Wrong reset	Permitted operation	Quick stop	Voltage output	Start		
CSP mode (8)	0	0(x)	1	1	0	06h	Get power
PP mode (1)	0	0	1	1	1	07h	Start
PV mode (3)	0	0(x)	0	1	0(x)	02h	Quick
HM mode (6)	0	1	1	1	1	0fh	Enable
-	1	0(x)	0(x)	0(x)	0(x)	80h	Clear error
-	0	0	0	0	0	0	Initiation

Additional information on other bits:

- Bit 2 is quick stop, trigger logic is 0 effective, notice to separate from other trigger logic.
- Bit 7 is error reset, trigger logic is rising edge effective.
- Bit 5 is immediate trigger, trigger logic is rising edge effective.

Table 6.4 Status Word(6041h) Bit Definition

Low 8 bits / Mode	7	6	5	4	3	2	1	0
Shared	Reserved	Not started	Quick stop	Power on	Error	Permitted operation	Start	Ready to start
Mode / high 8 bits	15	14	13	12	10	8	11	9
Shared	Depending on the operation mode						Limit validity	Distance
CSP mode (8)	Invalid	Invalid	Invalid	Following effective	Invalid	Emergency stop	It will be set when the hardware limit	0 below PreOP status
PP mode (1)	Trigger response	Parameter has 0	Invalid	New position point	Position arrival	Emergency stop		

				response			effective	
PV mode (3)	Invalid	Parameter has 0	Invalid	Speed is 0	Velocity arrival	Quick stop		
HM mode (6)	Trigger response	Parameter has 0	Origin error	Origin completion	Position arrival	Emergency stop		

Additional information on other bits:

- When the drive is put into power, the bit 4 will be set.
- Bit 5 quickly stops activation, which is valid under logic 0, contrary to the logic of other bits.
- Bit 9 remote, showing the state of the communication state, 0 below ProOP, at this time the control word (6040 h) command will not be executed.
- Bit 11 limit is set only, when the hardware limit is valid.
- Bit 8 abnormal stop is generally valid in hardware limit, deceleration stop and fast stop trigger state.
- Bit 12 follows the master station, if the driver does not enable or no longer follow instructions from the master station under CSP, this position is 0.

Table 6.5: State transition of each mode control operation

Mode \ Action		PreOP	Initialization	Get power	Start	Enable	Start operation	Change position	Stop	Error
CSP mode (8)	6040	Create a communication OP state and activate the NC axis	00h	06h	07h	0fh	1fh Master station send instruction	Master station control	Master station stop position instruction	-
	6041		250h	231h	233h	1237h	1237h	1237h	1237h	238h
PP mode (1)	6040	Create a communication OP state, setting motion parameters	00h	06h	07h	0fh	-	2fh->3fh	10fh	-
	6041		250h	231h	233h	8237h	1237h	1637h-> 1237h	1737h	1238h
PV mode (3)	6040	Create a communication OP state, setting motion parameters	00h	06h	07h	0fh	Immediate operation after enabling	Change the speed	10fh	-
	6041		250h	231h	233h	1637h	1637h	1637h	1737h	1638h
HM mode (6)	6040	Create a communication OP state, setting motion parameters	00h	06h	07h	0fh	1fh	-	10fh	-
	6041		250h	231h	233h	8337h	237h	237h	737h	238

Additional information on other bits:

- When the PP mode changes the position, it needs to give the bit5 rising edge of the control word to start the new position motion.

6.3 Touch Probe

Touch probe function is to capture and record the actual position of the motor by using the input signal with the touch probe function. The EM3E driver has two input I/O signals to support the probe function and can be enabled at the same time. The probe function related object dictionaries are shown in Table 6.6.

Table 6.6: Related Object Dictionaries of Touch Probe

Index	Bit Definition					
60B8h	7-6	5	4	3-2	1	0
	-	Touch Probe 1 falling edge trigger	Touch Probe 1 rising edge trigger	-	Touch Probe 1 mode	Touch Probe 1 enable
	15-14	13	12	11-10	9	8
	-	Touch Probe 2 falling edge trigger	Touch Probe 2 rising edge trigger	-	Touch Probe 2 mode	Touch Probe 2 enable
60B9h	7	6	5-3	2	1	0
	Actual level of touch probe 2	Actual level of Touch Probe 1		Touch Probe 1 falling edge trigger complete	Touch Probe 1 rising edge trigger complete	Touch Probe 1 action
	15-11			10	9	8
	-			Touch Probe 2 falling edge trigger complete	Touch Probe 2 rising edge trigger complete	Touch Probe 2 action
60BAh	Touch Probe 1 rising edge capture data value register					
60BBh	Touch Probe 1 falling edge capture data value register					
60BCh	Touch Probe 2 rising edge capture data value register					
60BDh	Touch Probe 2 falling edge capture data value register					
60FDh	The state of bit26 is bit 1 and bit 2 AND logic of Object (60B9h); The state of bit27 is bit 9 and bit 10 AND logic of Object (60B9h)					
2152h	It can be configured as probe 1 or probe 2 by writing its sub-indexes 01h and 02h to 17 or 18.					

Additional information on other bits:

- The bit0 and bit8 of Object (60B8h): start/stop control bit of Touch Probe 1 and Touch Probe 2 respectively, and the rising edge is effective.
- The bit1 and bit9 of Object (60Bh): Touch Probe modes are divided into single mode and continuous mode.
  - Single mode: After a Touch Probe is activated, it is captured only under the first trigger signal. In order to capture the new position value again, the bit0 /bit8 of the Object (60B8h) must be given a rising edge signal to restart the probe action.
  - Continuous mode: After a Touch Probe is activated, the capture action is carried out under each trigger signal.

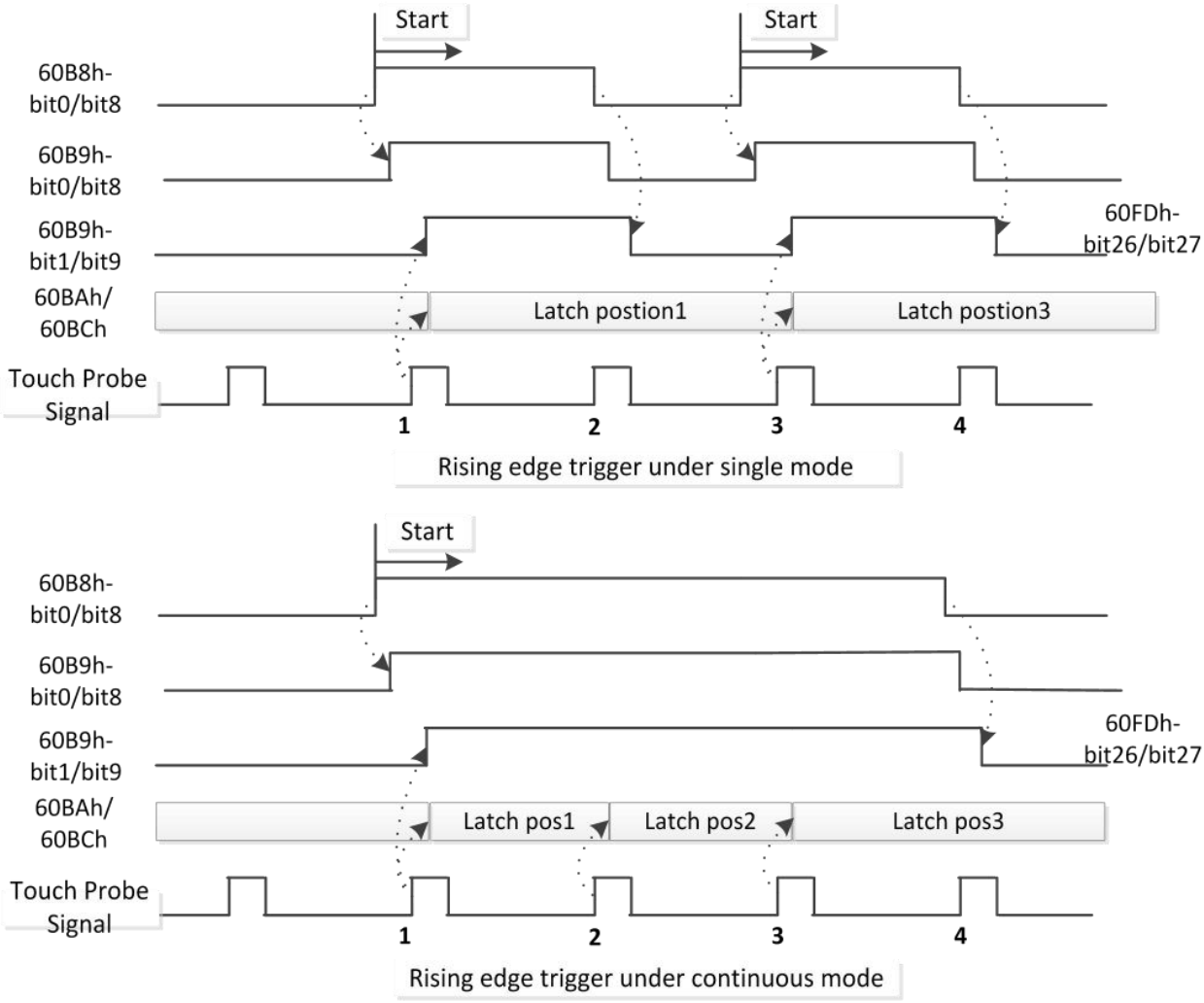

Figure 6.1: Touch Probe Mode

Appendix A: Homing Methods

The EM3E series drives support homing method 17-30, and method 35 & 37. Specific definition and the process of homing methods described below.
Specific definition and the process of homing methods described below.

Zero Position: a fixed position on the machine can correspond to a definite digital input signal, or to a Z signal
Zero Point of Machine: mechanical absolute zero position
Home offset: difference between zero position and zero point of machine, the value of Object 607Ch (default = 0), Zero position= zero point + home offset
Home Switch: homing switch input signal
Negative Limit: negative limit switch input signal
Positive Limit: positive limit switch input signal

- Method 17 requires negative limit switch, and method 18 requires positive limit switch.

  Method17 Description: The load is located on the right side of the negative limit switch, and the motor running in negative direction. When the motor reaching the negative limit signal for the first time, it will slow down and stop, then run in reverse, at last stops immediately when reaching the negative limit signal for the second time.

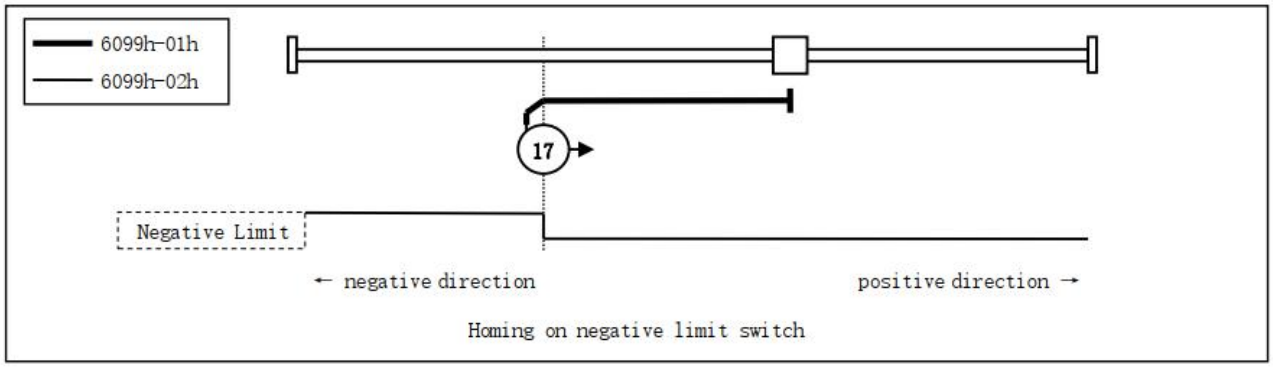

Method 17

  Method18 Description: The load is located on the left side of the positive limit switch, and the motor running in positive direction. When the motor reaching the positive limit signal for the first time, it will slow down and stop, then run in reverse, at last stops immediately when reaching the positive limit signal for the second time.

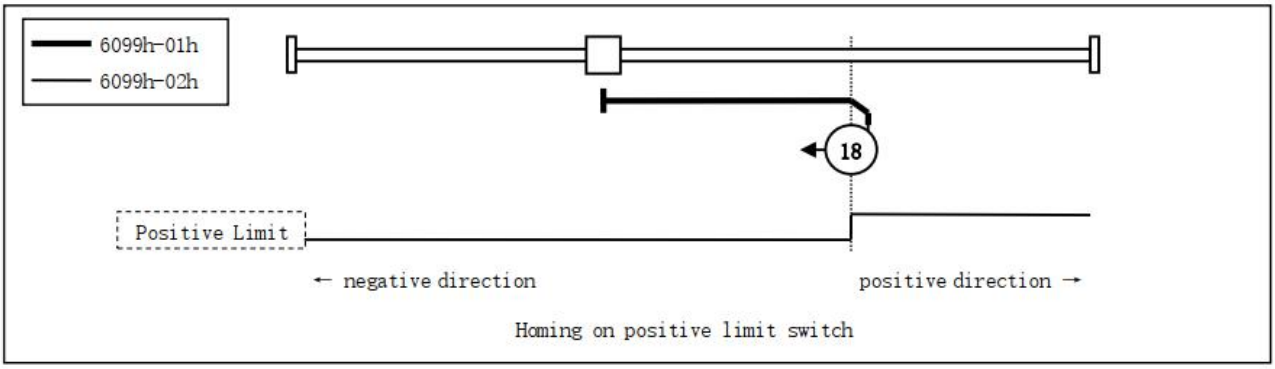

Method 18

- Method 19, 20, 21, 22 require home switch.

  Method19 & 20 Description: The load is located on the left or right side of the home switch.

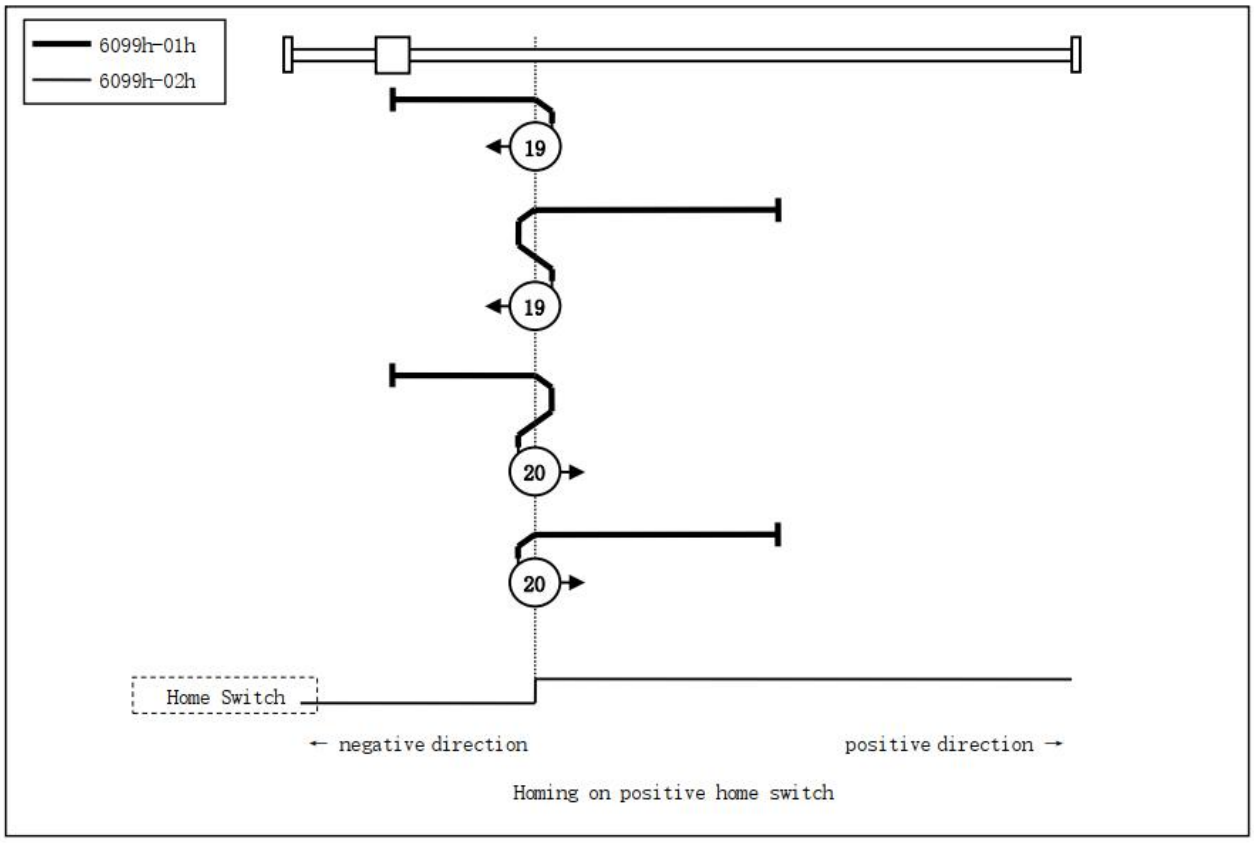

Method 19 & 20

Method21 & 22 Description: The load is located on the home switch.

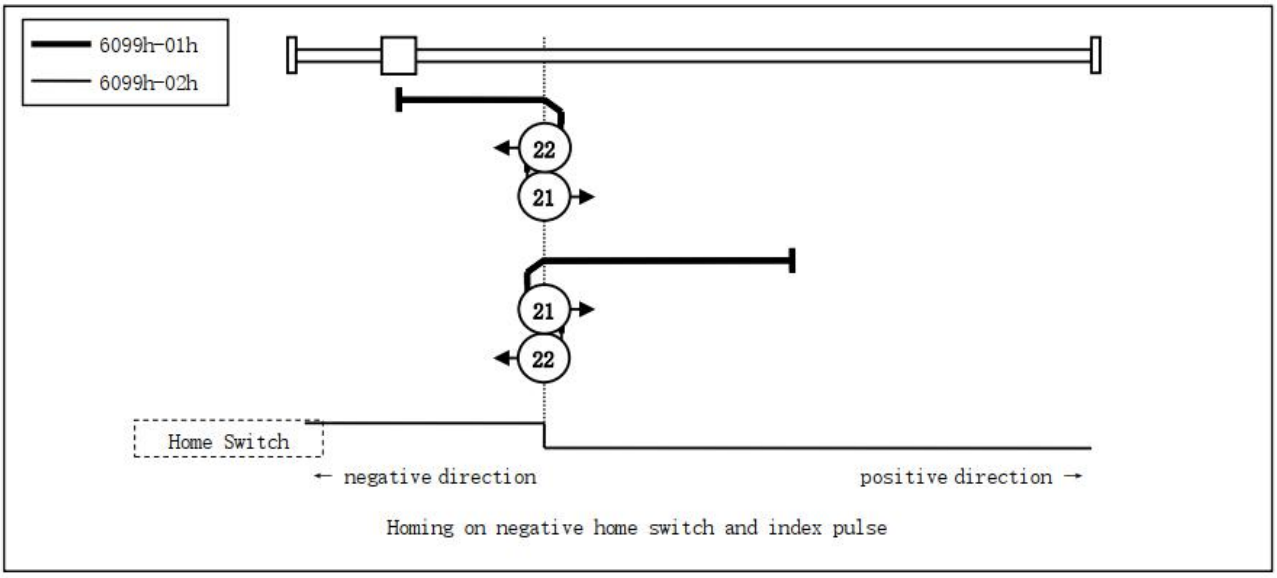

Method 21 & 22

- Method 23, 24, 25, 26 require home switch and positive limit switch.

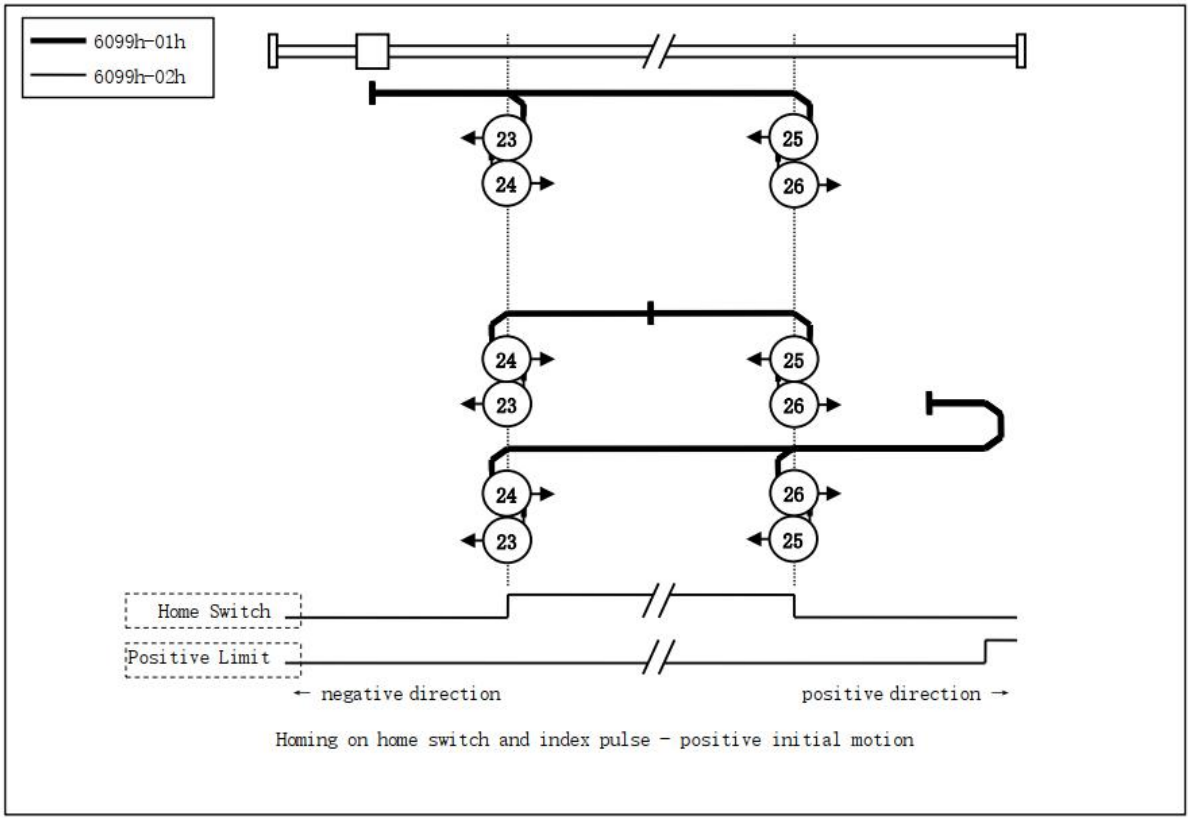

Method 23 & 24 & 25 & 26

- Method 27, 28, 29, 30 require origin switch (or home switch) and negative limit switch.

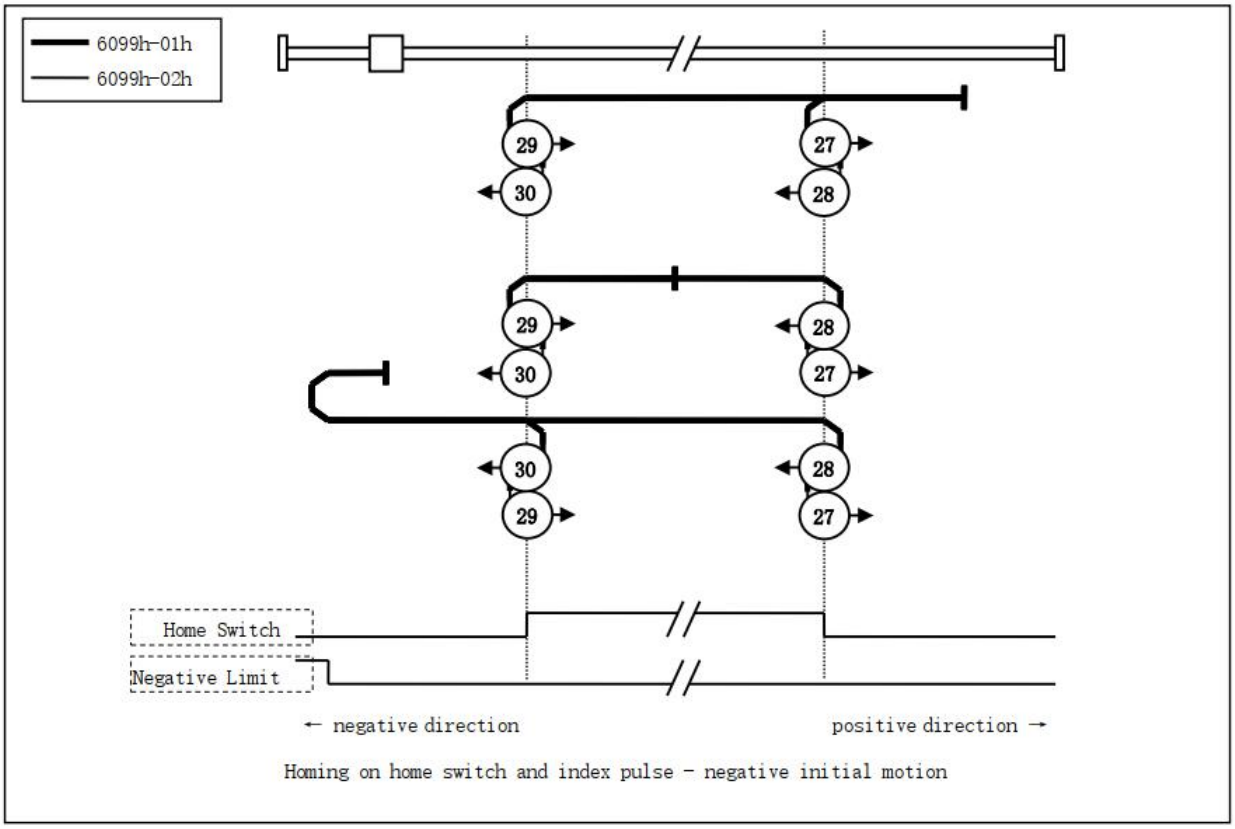

Method 27, 28, 29, 30

- Method 35 & 37 use the current position as the Home switch Zero Position, it's recommended method 37

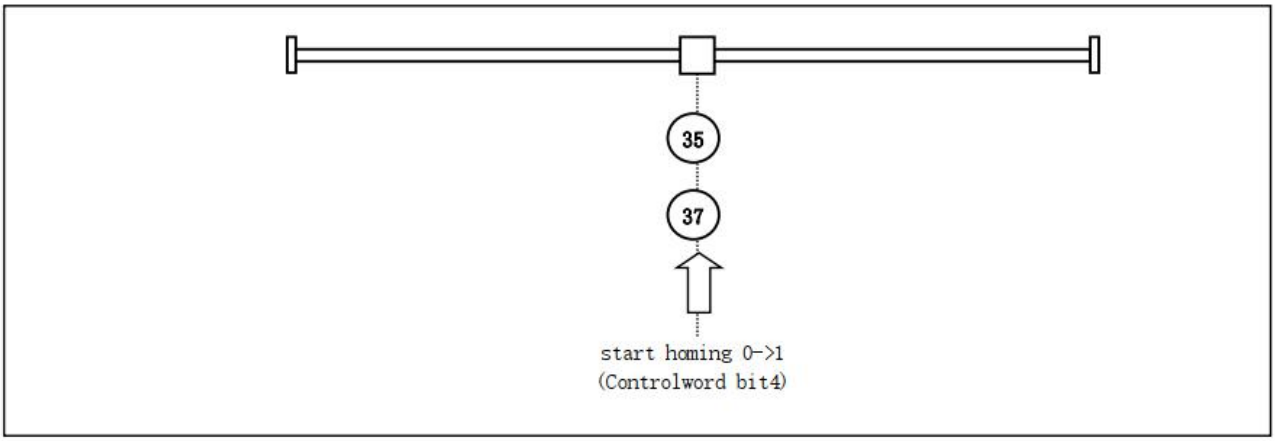

Method 35 & 37

Appendix B: Object Dictionaries

Index	Sub-index	Name	Access	Type	Range	Default Value	Unit	Remark
1000	0	Device type	R	UINT	0-32767	0x40912	-	Refer to CIA 402 profile
1001	0	Error register	R	USINT	0-255	0	--	Refer to Chapter 5.1
1008	0	Device name	R	UINT	0-32767	DM3C-X	-	DM3C-EC522---->EM3E-522E DM3C-EC556---->EM3E-556E DM3C-EC870---->EM3E-870E
1010	00	Number of sub-index	R	UINT	0-32767	4	-	-
	01	Save all parameters	R/W	UDINT	0-0xFFFFFFFF	0	-	Need to write 0x65766173 or 1702257011 (decimal) into sub-index. It will return 1 if save successfully
	02	Save communication parameters	R/W	UDINT	0-0xFFFFFFFF	0	-	
	03	Save motion parameters	R/W	UDINT	0-0xFFFFFFFF	0	-	
	04	Save factory parameters	R/W	UDINT	0-0xFFFFFFFF	0	-	
1011	00	Number of sub-index	R	UINT	0-32767	4	-	-
	01	Restore all parameters to default setting	R/W	UDINT	0-0xFFFFFFFF	0	-	Need to write 0x64616f6c or 1684107116 (decimal) into sub-index. It will return 1 if save successfully
	02	Reset communication parameters to factory setting	R/W	UDINT	0-0xFFFFFFFF	0	-	
	03	Reset motion parameters to factory setting	R/W	UDINT	0-0xFFFFFFFF	0	-	
	04	Reset user parameters to factory setting	R/W	UDINT	0-0xFFFFFFFF	0	-	
1018	00	Number of sub-index	R	UINT	0-32767	4	-	-
	01	Vendor ID	R	UINT	0-32767	4321	-	Leadshine code
	02	Product code	R	UINT	0-32767	8X00	-	X=1---->EM3E-556E X=2---->EM3E-870E X=3---->EM3E-522E
	03	Revision number	R	UINT	0-32767	1	-	-
	04	Series number	R	UINT	0-32767	1	-	-
1600	0	Number of sub-index	R/W	UINT	0-32767	3	-	Default number of 1st mapping object
	01-08	1st RXPDO-Map object	R/W	UDINT	0-0xFFFFFFFF	-	-	Default number of 1st RXPDO-Map object
1601	0	Number of sub-index	R/W	UINT	0-32767	6	-	Default number of 2nd mapping object

	01-08	2nd RXPDO-Map object	R/W	UDINT	0-0xFFFFFFFF	-	-	Default number of 2nd RXPDO-Map object
1602	0	Number of sub-index	R/W	UINT	0-32767	5	-	Default number of 3rd mapping object
	01-08	2nd RXPDO-Map object	R/W	UDINT	0-0xFFFFFFFF	-	-	Default number of 3rd RXPDO-Map object
1603	0	Number of sub-index	R/W	UINT	0-32767	7	-	Default number of 4th mapping object
	01-08	3rd RXPDO-Map object	R/W	UDINT	0-0xFFFFFFFF	-	-	Default number of 4th RXPDO-Map object
1A00	0	Number of sub-index	R/W	UINT	0-32767	7	-	Default number of 1st mapping object
	01-08	1st TXPDO-Map object	R/W	UDINT	0-0xFFFFFFFF	-	-	Default number of 1st TXPDO-Map object
1A01	0	Number of sub-index	R/W	UINT	0-32767	0	-	Default number of 2nd mapping object
	01-08	2nd TXPDO-Map object	R/W	UDINT	0-0xFFFFFFFF	-	-	Default number of 2nd TXPDO-Map object
1C00	0	Number of sub-index	R	UINT	0-32767	4	-	-
	01	Output type of email	R	UINT	0-32767	1	-	-
	02	Input type of email	R	UINT	0-32767	2	-	-
	03	Output type of process data	R	UINT	0-32767	3	-	-
	04	Input type of process data	R	UINT	0-32767	4	-	-
1C12	0-04	RXPDO assign	R/W	UINT	0-32767	1600	-	-
1C13	0-02	TXPDO assign	R/W	UINT	0-32767	1A00	-	-
1C32	0-0A	RXPDO administrative parameters	R	UINT	0-32767	-	-	-
1C33	0-0A	TXPDO administrative parameters	R	UINT	0-32767	-	-	-
2000	00	Peak current	R/W/S	DINT	100-7000	1000	mA	Drive's max output current.
2001	00	Microstep resolution	R/W/S	DINT	200-51200	10000	Pulse	Required number of pulse to rotate 1 revolution of motor
2007	00	Action when disabled	R/W/S	UINT	0-1	0	-	0: Don't respond to commands, and the motor shaft is not locked; 1: Don't respond to commands, but the motor shaft is locked;
2010	01	Internal filtering time	R/W/S	UINT	0-32767	100	0.1ms	Internal smoothing time for control command.
2012	00	Soft-starting time	R/W/S	UINT	10-3000	1	ms	Internal smoothing time for starting current.
2013	00	Auto-tuning at power on	R/W/S	UINT	0-2	1	--	1: Yes. 0: No
201A	01	Locking current percentage of power on	R/W/S	UINT	0-100	100	%	Usually keep the default value.

201B	00	Locking duration time	R/W/S	UINT	0-1500	200	ms	Appropriately reduce this value if you want to shorten the time of locking shaft.
201C	00	Max time to close brake	R/W/S	UINT	100-10000	1000	ms	Usually keep the default value
201D	00	Zero speed point	R/W/S	UINT	0-500	10	0.1r/s	-
2047	00	Over voltage point	R/W/S	UINT	0-1000	75	V	
2048	00	Bus-voltage	R	UINT	0-65535	-	V	-
2051	00	Motor running direction	R/W	DINT	0-255	0	--	Valid when 0x225C= 0; 0: CCW direction 1 or 4: CW direction
2056	00	Alarm detection selection	R/W/S	DINT	0~65535	65535	--	Bit setting: =1: Yes; =0: No Bit0: over-current (Cannot be changed) Bit1: over-voltage
2090	01	Current loop Kp	R/W	DINT	0~32767	1500	--	--
	02	Current loop Ki	R/W	DINT	0~32767	300	--	--
	03	Current loop Kc	R/W	DINT	0~32767	300	--	--
2150	00	Slave ID	R/W/S	UINT	0-256	1	--	Valid when 0x2151= 1;
2151	00	Slave ID resource	R/W/S	UINT	0-10	0	--	0: DIP switches 1: Setting by 0x2150 2: ESC
2152	01	Input1 function	R/W/S	DINT	0-65535	0x17 (Decimal 23)	--	Default is touch probe1, take effect changes need restart power
	02	Input2 function	R/W/S	DINT	0-65535	0x18 (Decimal 24)	--	Default is touch probe2, take effect changes need restart power
	03	Input3 function	R/W/S	DINT	0-65535	0x16 (Decimal 22)	--	Default is Home switch, take effect changes need restart power
	04	Input4 function	R/W/S	DINT	0-65535	0x01 (Decimal 1)	--	Default is positive limit, take effect changes need restart power
	05	Input5 function	R/W/S	DINT	0-65535	0x02 (Decimal 2)	--	Default is negative limit, take effect changes need restart power
	06	Input6 function	R/W/S	DINT	0-65535	0x19 (Decimal 25)	--	Default is user defined, take effect changes need restart power
2232	00	Synchronous compensation1	R/W	DINT	0—65535	2	-	
2233	00	Synchronous compensation2	R/W	DINT	0—65535	100	-	
225C	00	Special function register	R/W	DINT	0~32767	0	--	Bit1=1: Set motor running direction by 0x607E Bit2=1: Set virtual input by 0x5012-03
22A9	00	Limit Mode	R/W	DINT	0-10	0	--	0: Stop normally 1: Invalid 2: Alarm, error code 260
22B4	00	Quick stop selection	R/W	DINT	0~32767	0	--	0: Alarm, error code 570, 1: Refer to 0x605A
22BA	00	Holding time	R/W	UINT	10~3000	200	ms	How long after the current switch to standby current

22BB	00	Holding current percentage	R/W	UINT	0~100	50	%	The percentage of current to peak current during standby time
22C2	01	JOG acceleration	R/W	UINT	0~32767	200		
	02	JOG speed	R/W	UINT	0~32767	60		
	03	JOG distance	R/W	UINT	0~32767	0		
	04	JOG cycles	R/W	UINT	0~32767	1		
	05	JOG direction	R/W	UINT	0~32767	0		
	06	JOG preparation time	R/W	UINT	0~32767	100	ms	
3100	01	Control software version	R	UINT			--	
	02	Firmware version	R	UINT			--	
	03	EtherCAT protocol version	R	UINT			--	
3FFE	01-0E	Alarm record	R	USINT	0~32767	--	--	0x3FFE+01 is the current error code (current alarm) or the most recent error code (currently no alarm); 0x3FFE+02-0E are followed by the historical error code.
4003	01	Delay of closing brake	R/W/S	UINT	0-1500	250	ms	
4003	02	Delay of loosening brake	R/W/S	UINT	0-1500	250	ms	
4003	03	Max speed to close brake	R/W/S	UINT	0-500	10	0.1r/s	
5000	01	Trajectory generator	R	UINT	0~32767	1	--	Internal protocol stack parameters
	02	Motion state machine	R	UINT	0~32767	0	--	0: Disabled 0x9A9A: Enabled
	03	Internal enable state	R	UINT	0~32767	0	--	0: Disabled 1: Enabled
	04	Reach the target state	R	UINT	0~32767	--	--	Bit0=0: Not reach Bit0=1: Reach Bit1=0: No stall Bit1=1: Stalled
5002	01	ESC ID	R/W	UINT	0~32767	0	--	Write 0, return the ID data in ESC to 0x5002-02； Write 0x12, return the current ID setting by DIP switches
	02	ESC data	R	UINT	0~32767	408	--	Return ID data
5004	01-0E	Sync0 Synchronization interface parameters	R	UINT	0~32767	--	--	--
	0F	Sync0 Synchronization interface parameters	R/W	UINT	0~32767	--	--	Bit0 =1: RPDO mapping can't be written by SDO; Bit0 =0: RPDO mapping can be written by SDO; Bit1=1: Detect the number of PDO mapping; Bit1=1: Don't detect the number of PDO mapping; Bit2=1: Send 0xF directly to enable; Bit2=0: Send 0xF can't be enabled.

<table>
<tr><td>5005</td><td>00</td><td>DC compensation base value</td><td>R/W</td><td>UINT</td><td>0~32767</td><td>500</td><td>--</td><td>--</td></tr>
<tr><td>5006</td><td>00</td><td>Synchronization error detection</td><td>R/W</td><td>UINT</td><td>0~32767</td><td>0</td><td>--</td><td>--</td></tr>
<tr><td>5010</td><td>00</td><td>Effective input and output watchdog time</td><td>R/W</td><td>UINT</td><td>0~32767</td><td>0</td><td>--</td><td>--</td></tr>
<tr><td>5011</td><td>00</td><td>Internal actual location</td><td>R</td><td>UDINT</td><td>0~32767</td><td>--</td><td>--</td><td>--</td></tr>
<tr><td rowspan="4">5012</td><td>01</td><td>Homing arrival position</td><td>R/W</td><td>DINT</td><td>0~32767</td><td>0</td><td>--</td><td>--</td></tr>
<tr><td>02</td><td>Homing trigger position</td><td>R/W</td><td>DINT</td><td>0~32767</td><td>0</td><td>--</td><td>--</td></tr>
<tr><td>03</td><td>Homing virtual input</td><td>R/W</td><td>UDINT</td><td>0~32767</td><td>0</td><td>--</td><td>When 0x225C=4, activate the virtual input function; 60FD different bits, corresponding to different virtual inputs;
<table>
<tr><td>Inputs</td><td>Bit of 60FD</td></tr>
<tr><td>Probe signal 1</td><td>Bit 26=1</td></tr>
<tr><td>Home switch</td><td>Bit 2=1</td></tr>
<tr><td>Positive limit</td><td>Bit 1=1</td></tr>
<tr><td>Negative limit</td><td>Bit 0=1</td></tr>
</table>
For example: 0x225C=4 and start homing, set 0x5012-03=4, Home switch input; set 0x5012-03=2, Positive limit input; set 0x5012-03=2, Negative limit input</td></tr>
<tr><td>04</td><td>Homing setting</td><td>R/W</td><td>UINT</td><td>0~32767</td><td>5</td><td>--</td><td>Bit0=0: Homing protection is not turned on;
Bit0=1: Homing protection is turned on;
(Homing protection: when start homing, If the limit signal takes effect, bit0=0 means homing normally, bit0=1 means stop homing as limit protection)

Bit2=0: The value of current position after in position = 0x607C;
Bit2=1: The value of 0x607C is used as the motion offset, and finally 0x6064 = 0;
Bit3=0: 0x6064= 0x607C after in position;
Bit3=1: 0x6064 = 0x607C after in position;</td></tr>
<tr><td>5015</td><td>05</td><td>Protocol setting</td><td>R/W</td><td>UINT</td><td>0~32767</td><td>255</td><td>--</td><td>Bit8 is used to select whether the speed arrival in PV mode comes from bit0 of 0x5000-04 or bit8 of 0x5000-04.</td></tr>
<tr><td rowspan="2">5400</td><td>01</td><td>Minimum synchronization period</td><td>R/W</td><td>UINT</td><td>250~2000</td><td>250</td><td>us</td><td>--</td></tr>
<tr><td>02</td><td>Maximum synchronization period</td><td>R/W</td><td>UINT</td><td>250~20000</td><td>10000</td><td>us</td><td>--</td></tr>
<tr><td>5503</td><td>04</td><td>Special function register</td><td>R/W</td><td>UINT</td><td>0~65535</td><td>2</td><td>--</td><td>Bit0 = 0: Asynchronous mode, the host will track 0x607A-00 in real time;
Bit0=1: Asynchronous mode, the host does not track 0x607A-00in real time.</td></tr>
<tr><td>603F</td><td>00</td><td>Error code</td><td>R</td><td>UINT</td><td>0-65535</td><td>0</td><td>--</td><td>Refer to chapter 5.2</td></tr>
</table>

6040	00	Control word	R/W	UINT	0-65535	0	--	Refer to chapter 6.1
6041	00	Status word	R	UINT	0-65535	0	--	Refer to chapter 6.1
605A	00	Quick stop type selection	R/W	UINT	0-65535	6	--	0: After stopping immediately, switch on disable state; 1: After decelerating to stops at a speed value of 0x6084, switch on disable state; 2: After decelerating to stops at a speed value of 0x6085, switch on disable state; 3: After decelerating to stops at a speed value of 0x60C6, switch on disable stat; 4: After stopping immediately, switch on quick stop state; 5: After decelerating to stops at a speed value of 0x6084, switch on quick stop state; 6: After decelerating to stops at a speed value of 0x6085, switch on quick stop state; 7: After decelerating to stops at a speed value of 0x60C6, switch on quick stop state;
605D	00	Asynchronous mode halt selection	R/W	INT	0~65535	1	--	1: After decelerating to stops at a speed value of 0x6084, keep operation enable state; 2: After decelerating to stops at a speed value of 0x6085, keep operation enable state; 3: After decelerating to stops at a speed value of 0x60C6, keep operation enable state; 4: After stopping immediately, keep operation enable state.
6060	00	Operation mode	R/W	USINT	0-255	8	--	1: PP mode, 3: PV mode, 6: Home mode, 8: CSP mode
6061	00	Operation mode display	R	USINT	0-255	8	--	-
6062	00	Position command	R	DINT	-2147483648 ~2147483647	0	P	P: pulse
6064	00	Position actual value	R	DINT	-2147483648 ~2147483647	0	P	P: pulse
606B	00	Velocity command	R	DINT	-2147483648 ~2147483647	0	P/s	-
606C	00	Velocity actual value	R	DINT	-2147483648 -2147483647	0	P/S	-
607A	00	Target position	R/W	DINT	-2147483648 ~2147483647	0	P	Target position under PP mode
607C	00	Home offset	R/W	DINT	-2147483648 ~2147483647	0	P	The value of difference between senor origin position and mechanical origin position under Home mode . If the value is set to10000, it means that at homing mode 19,

								the motor reaches the Home switch and stops immediately, then reverses at low speed until it leaves the Home switch, at last stops at a distance of 10000P.
607D	01	Software negative limit	R/W	DINT	-2147483648 ~2147483647	0	P	New target positions are checked against these limits. The limits are relative to the machine home position, which is the result of homing. As default the software position limits are switched off. Changed values must be saved and the drive must be restarted to take enable the new the software limits.
	02	Software positive limit	R/W	DINT	-2147483648 ~2147483647	0	P	
607E	00	Motor direction	R/W	USINT	0~255	0	--	Need to set 0x225C first
60FF	00	Target velocity	R/W	DINT	-2147483648 ~2147483647	0	P/S	Profile velocity under PV mode
6080	00	Max velocity limit	R/W/S	UDINT	-2147483648 ~2147483647	3000	rpm	
6081	00	Max profile velocity	R/W/S	DINT	-2147483648 ~2147483647	50000	--	Max. Allowable velocity under PP mode
6082	00	Start velocity	R/W/S	DINT	-2147483648 ~2147483647	0	--	Start velocity under PP mode
6083	00	Profile acceleration	R/W/S	DINT	-2147483648 ~2147483647	4000	P/S^2	Acceleration under PP and PV mode
6084	00	Profile deceleration	R/W/S	DINT	-2147483648 ~2147483647	4000	P/S^2	Deceleration under PP and PV mode
6085	00	Quick stop deceleration	R/W/S	DINT	-2147483648 ~2147483647	400000000	P/S^2	Deceleration of quick stop under PP, PV and Home mode
6098	00	Homing method	R/W/S	USINT	1-100	19	-	Methods of searching origin under homing mode, refer to Appendix A
6099	01	Fast homing velocity	R/W/S	DINT	-2147483648 ~2147483647	50000	P/S	Speed during search for limit switch signal
	02	Slow homing velocity	R/W/S	DINT	-2147483648 ~2147483647	25000	P/S	Speed during search for Home switch
607C	00	Home offset	R/W/S	DINT	-2147483648 ~2147483647	0	P	The value of difference between senor origin position and mechanical origin position under Home mode
609A	00	Homing acceleration	R/W/S	USINT	-2147483648 ~2147483647	25000	P/S^2	Acc / Dec velocity under Home mode
60B0	00	Position offset	R/W	DINT	-2147483648 ~2147483647	0	P	Position offset under PP mode
60B8	00	Touch probe control word	R/W	UINT	0-65535	0	-	Set touch probe function, refer to chapter 6.3
60B9	00	Touch probe statue word	R	UINT	0-65535	0	-	Status of touch probe 1/2, refer to chapter 6.3
60BA	00	Touch probe 1 positive value	R	DINT	-2147483648 ~2147483647	0	P	Data value sensed by touch probe 1 at rising edge
60BB	00	Touch probe 1 negative value	R	DINT	-2147483648 ~2147483647	0	P	Data value sensed by touch probe 1 at falling edge
60BC	00	Touch probe 2 positive value	R	DINT	-2147483648	0	P	Data value sensed by touch probe 2 at rising edge

					~2147483647			
60BD	00	Touch probe 2 negative value	R	DINT	-2147483648 ~2147483647	0	P	Data value sensed by touch probe 2 at falling edge
60C21	01	Interpolation time period value	R/W	USINT	0-255	2	--	Only for internal tuning.
	02	Interpolation time unit	R/W	SINT	-128-127	0	--	
60D5	00	Touch probe 1 rising edge counter	R	UINT	0-65535	0	--	Frequency for capture of touch probe 1 rising edge
60D6	00	Touch probe 1 falling edge counter	R	UINT	0-65535	0	--	Frequency for capture of touch probe 1 falling edge
60D7	00	Touch probe2 rising edge counter	R	UINT	0-65535	0	--	Frequency for capture of touch probe 2 rising edge
60D8	00	Touch probe 2 falling edge counter	R	UINT	0-65535	0	--	Frequency for capture of touch probe 2 falling edge
60FD	00	Digital input statue	R	UDINT	0- 4294967296	0	--	Statue of digital input signals, refer to chapter 4.3.1
60FE	01	Open physical output	R/W/S	UDINT	0- 4294967296	0	--	Able to control user output through this object, refer to chapter 4.3.4
	02	Enable physical output	R/W/S	UDINT	0- 4294967296	0	--	
6502	00	Supported operation mode	R	UDINT	0- 4294967296	165	--	Operation modes the drive supported

Appendix C: Connectors

Pic	Description	Brand&Specification	Model	Number	Package Inside
	Motor Connector	**MOLEX** 4PIN, 13A	39012040	1	Yes
		MOLEX	39000038	4	Yes
	I/O Connector	**ANYTEK** 2*5PIN, 3.5mm	NL10100200G0G	1	Yes
	Power Connector	**DEGSON** 2PIN, 5.0mm	2EDGK-5.0-02P-13-1000AH	1	Yes

Appendix D: FAQs

- **Communicate errors.**

  ► If it is the first time to use this EtherCAT drive, check whether the version of XML file is correct. Most masters support scanning slave, it is recommended to create configuration in scanning way.

  ► Some masters require the connection of the network cable according to the ECAT IN and ECAT OUT.

  ► Check whether the PDO synchronization period set by master and slave is the same.

  ► The PDO synchronization period (Ethercat communication period) not supported by EM3E, such as 1.1ms, 0.9ms, etc. The common PDO synchronization period is 250us/500us/ 1ms/2ms/4ms, etc.

  ► Some masters require DIP switches to be set to the same node ID as the configuration setting.

  ► The network cable is faulty or has poor contact, replace the cable. Or check the problem by swapping it with the network cable on a normally connected node.

  ► The EtherCAT drive is faulty, replace the cable. Or check the problem by swapping it with a normally worked drive.

- **Drive cannot be enabled**

  ► Check the status of the drive. Under normal conditions, the PWR green light of the driver is on for a long time and the ALM red light is off. the L/A green light of the ECAT IN and ECAT OUT network ports blinks rapidly, the run green light is on for a long time and the Err red light is off.

  ► PDO configuration or PDO mapping error. It needs to configure PDO or PDO mapping correctly.

  ► Check if the value of object 0x6040 is 16#F and if bit0~bit3 of object 0x6041 is 0111.

  ► Check the master for warnings or errors. Clear the master station alarm or warning.

  ► If the master station shows enable complete, but the motor is not enabled. Check whether the motor wire is connected wrongly or disconnected. Or check if the output current of drive is set correctly.

- **Alarm when send instruction to slave**

  ► Check the drive for alarms. Check if the drive ALM red light and ERR red light are flashing, if there is an alarm, check the drive instruction manual and locate the problem according to the alarm instructions.

  ► The operation mode is not correct. Check if object 0x6060 is 8 (CSP mode).

  ► PDO configuration exception. Some masters need to check if the slave's object 0x6061 returns the correct value. If 0x6061 is not configured, the slave may not work or the master may alarm.

  ► The limit switch is activated. Check that the limit switch input is the same as the logic set by the master. Is the polarity of the slave input port the same as the limit switch used. The limit switch is not damaged. Whether the wiring between the limit switch and the slave is correct. The bit bit of object 0x60FD is mapped incorrectly with the master.

- **Motor does not turn**

  ► The controller instruction is not sent to the driver. Check if the value of 0x607A (Target position) has changed, if not, then maybe the program has an exception.

  ► Limit switch is activated. Check if the limit switch logic status is consistent with the set by the master. Or whether the polarity of the slave input port is consistent with the limit switch. Or whether the limit switch is damaged. Or whether the wiring between the limit switch and the slave is correct. Or the mapping between the bit of 0x60FD and the master is wrong.

  ► The control instruction is normal, but the motor does not turn. It may be that the output current setting is too small. Or the load is too heavy. Or the starting speed is too large. Or the acceleration time is too short. Or the motor is damaged. All of the above can be tested by letting the motor unload and setting the motor speed to 60rpm with acceleration time 200ms to check the problem.

- **Homing Error**

  ► Wrong homing method. There are three modes of homing, when using the master homing mode, the operation mode object 0x6060 = 8; when using the slave homing mode, the 0x6060 = 6; when using the master-slave combination homing method, the 0x6060 value is first 8 and then 6. Please check master manufacturer for default homing mode, and then check the selected homing method, the relevant parameters are correct, and the limit switch needed in the selected homing method is normal.

  ► Stop on the limit switch and keep processing Busy state. Some master stations are master-slave combination homing mode (Panasonic and Keyence), the 0x6060 value is first 8 and then 6. If there is no configuration 0x6060 in PDO or wrong configuration, then will cause homing error.

- **Occasional dropouts during operation**

  ► Always a certain drive dropouts. Maybe network cable problem: Poor contact between network cable and drive interface. Or the OUT port of the last drive has a problem. Or the drive itself has problem. All of the above can be tested by swapping the drive or swapping the network cable.

  ► Random drive dropouts. Interference problem: Poor quality of network cable, it is recommended to use a Category 5 Fast Ethernet cable or above, industrial grade network cable with twisted pair shielding. Ensure that the equipment is well grounded. When laying out the electrical cabinet, strong and weak power need to be separated. Keep away from high power strong interference devices such as plasma generators, laser generators, VFD etc.