Rated Voltage (Vac)	**220**
Rated Power (w)	**1300**
Rated Torque (N.m)	**8.34**
Peak Torque (N.m)	**25.02**
Rated Speed (rpm)	**1500**
Peak Speed (rpm)	**4500**
Rated Current (Amp)	**9.3**
Peak Current (Amp)	**27.9**
Torque Const (N.m/Amp)	**0.86**
Back EMF Const(V/Krpm)	**52.4**
Resistance(Ω)	**0.58±10%**
Inductance(mH)	**5.8±20%**
Inertia (kg*m^2*10^{-4})	**18.7**
Poles	**10**
Encoder type	**23bit magnetic**
IP rating	**IP65**
Mass (Kg)	**7.0**
Allowable radial load(N)	**686**
Allowable thrust load(N)	**343**

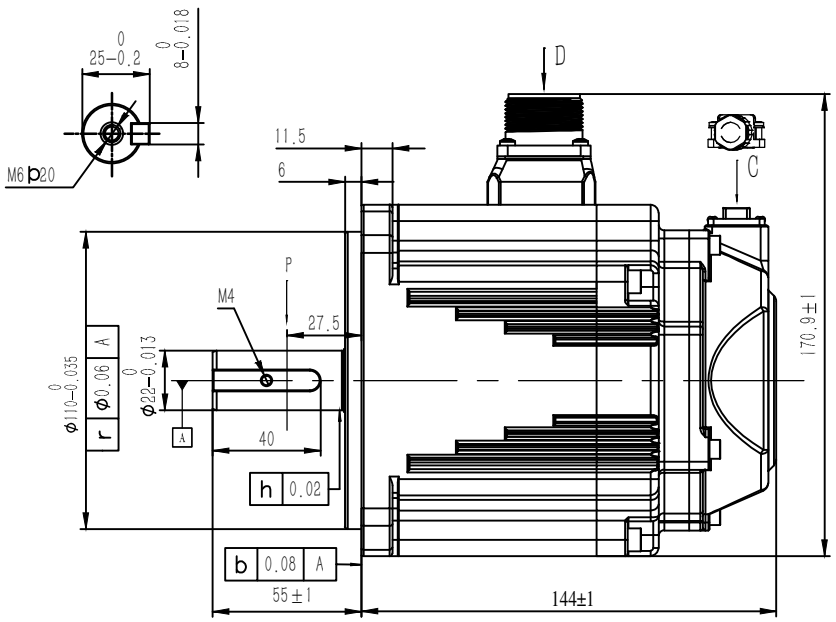

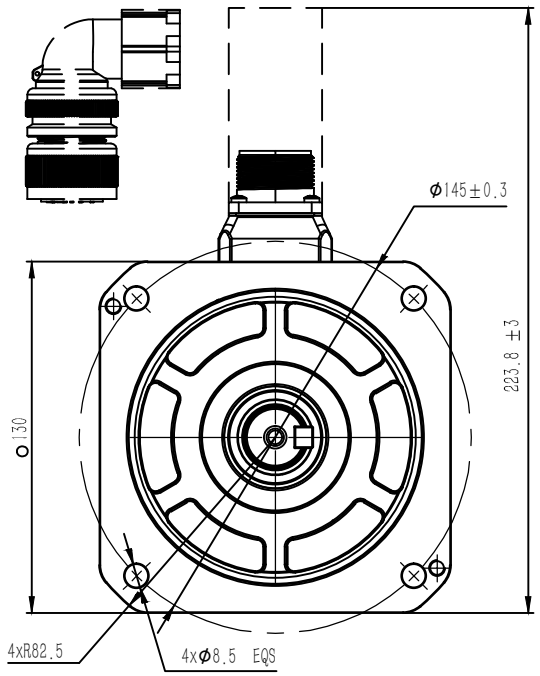

Power Cable (no brake)	CABLE-RZH***-135-TS
Encoder Cable	CABLE-BMH***-114-TS (For Inc) CABLE-BMAH***-124-TS (For Abs)

The curve of torque-speed

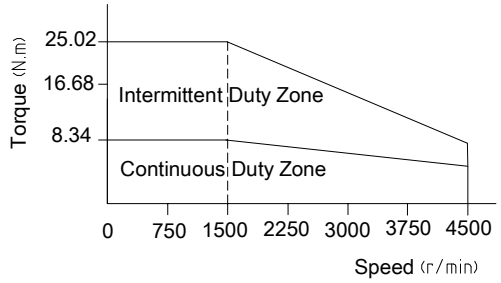

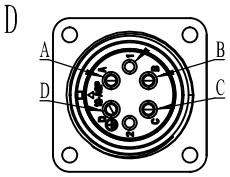

Assignment of power connector				
Pos	A	B	C	D
Signal	U	V	W	PE
Color	Blue	Black	Red	Yellow/green

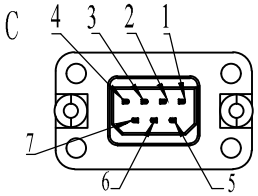

Assignment of encoder connector							
Pos	1	2	3	4	5	6	7
Signal	PE	5V	0V	SD+	SD-	BAT+	BAT-
Color	—	Red	Black	Blue	Yellow	Brown	White

Leadshine Technology Co .Ltd

ELM1H-1300MD130F-H

130mm , high inertia ,**1300** w servo motor
23bit multi-turns magnetic encoder,no brake