Hardware Manual

Liberty MDrive Ethernet TCP/IP

NEMA 17 (42 mm) with Pluggable Connectors

Publication IMS-MN-LMDE42_A

02/2022

IP20

Novanta IMS

The information provided in this documentation contains general descriptions and/or technical characteristics of the performance of the products contained herein. This documentation is not intended as a substitute for and is not to be used for determining suitability or reliability of these products for specific user applications. It is the duty of any such user or integrator to perform the appropriate and complete risk analysis, evaluation and testing of the products with respect to the relevant specific application or use thereof.

Neither Novanta IMS nor any of its affiliates or subsidiaries shall be responsible or liable for misuse of the information contained herein. If you have any suggestions for improvements or amendments or have found errors in this publication, please notify us.

You agree not to reproduce, other than for your own personal, noncommercial use, all or part of this document on any medium whatsoever without permission of Novanta IMS, given in writing. You also agree not to establish any hypertext links to this document or its content.

Novanta IMS does not grant any right or license for the personal and noncommercial use of the document or its content, except for a non-exclusive license to consult it on an “as is” basis, at your own risk. All other rights are reserved.

All pertinent state, regional, and local safety regulations must be observed when installing and using this product. For reasons of safety and to help ensure compliance with documented system data, only the manufacturer should perform repairs to components.

When devices are used for applications with technical safety requirements, the relevant instructions must be followed. Failure to use Novanta IMS software or approved software with our hardware products may result in injury, harm, or improper operating results.

Failure to observe this information can result in injury or equipment damage.

For information on the availability of products, go to https://novantaims.com/

The information contained in the present document is subject to change without notice. The technical characteristics of the devices described in the present document also appear online. The characteristics that are presented in the present document should be the same as those characteristics that appear online. In line with our policy of constant improvement, we may revise content over time to improve clarity and accuracy. If there is a difference between the document and online information, use the online information as reference. All details provided are technical data which do not constitute warranted qualities.

Some of the product designations are registered trademarks of their respective owners, even if this is not explicitly indicated.

Table of Contents

Safety Information 5

Important Information 5
Qualification of Personnel 5
CyberSecurity Standards and Certification 5
Intended Use 6
Product Related 6

About this Manual 8

Introduction 8
Terminology Derived from Standards 8
Writing Conventions and Symbols 9
Documentation and Literature References 10
Website Directory 10
Documentation Feedback 10

Chapter 1: Introduction 11

About This Product 12
Unit Overview 12
Components and Interfaces 13
Name Plate 15
Part Number Identification 16

Chapter 2: Technical Data 19

Certifications 20
Environmental Conditions 20
Mounting Data 22
Mechanical Data 24
Electrical Data 28
Rotary Motor Data 32
External Linear Actuator Data 33
Electric Cylinder Data 35

Chapter 3: Engineering 36

External Power Supply Units 37
Auxiliary Power Supply 40
Wiring and Shielding 40
Ground (Earth) Design 41
Monitoring Functions 42

Chapter 4: Installation 43

Electromagnetic Compatibility, EMC 45
Mechanical Installation 46
Electrical Installation 48
Supply Voltage VDC Connection 49
Multifunction Interface Connection 51
Signal Input Circuits 53
Signal Output Circuit 55
Analog Input 56
Communication Interface Connection 57
Checking Wiring 57

Chapter 5: Configuration 58

Preparing for Configuration 60
Installing the LSS 60

Chapter 6: Operations 61

Basics 62
Software Operation Modes 64
Operation by hMT Modes 66
I/O Operation 68

Appendix A: Diagnostics and Troubleshooting 70

Operation State and Error Indication 70
Error Codes 72

Appendix B: Accessories and Spare Parts 73

Accessories 73

Appendix C: Service, Maintenance, and Disposal 74

Service Address 75
Replacing Units 75
Shipping, Storage, and Disposal 76

Appendix D: LMD with Absolute Encoder 77

Overview 77
Unboxing Procedure 77
Connection of the Multifunction Interface 77
ICP0531 Encoder Back-up Battery Pack 78

Glossary 82

SAFETY INFORMATION

Important Information

Notice

Read these instructions carefully, and look at the equipment to become familiar with the device before trying to install, operate, service, or maintain it. The following special messages may appear throughout this documentation or on the equipment to warn of potential hazards or to call attention to information that clarifies or simplifies a procedure.

The addition of this symbol to a “Danger” or “Warning” safety label or message indicates that an electrical hazard exists which will result in personal injury if the instructions are not followed.

This is the safety alert symbol. It is used to alert of potential personal injury hazards. Obey all safety messages and labels that follow this symbol to avoid possible injury or death.

⚠ DANGER
DANGER indicates a hazardous situation which, if not avoided, **will result** in death or serious injury.

⚠WARNING
WARNING indicates a hazardous situation which, if not avoided, **could result** in death or serious injury.

⚠ CAUTION
CAUTION indicates a hazardous situation which, if not avoided, **could result** in minor or moderate injury.

NOTICE
NOTICE is used to address practices not related to physical injury.

Qualification of Personnel

Electrical equipment should be installed, operated, serviced, and maintained only by qualified personnel. No responsibility is assumed by Novanta IMS for any consequences arising out of the use of this material.

A qualified person is one who has skills and knowledge related to the construction and operation of electro-mechanical equipment and its installation, and has received safety training to recognize and avoid the hazards involved.

CyberSecurity Standards and Certification

Novanta follows local regulations and uses additional industry established frameworks to conform to cyber security standards. Novanta also takes an active part in the evolution of today’s industrial cyber security standards, contributing to these standards and frameworks.

In accordance with US California Senate Bill No. 327, and under direct guidance from Novanta, Novanta IMS has implemented a level of cyber-secure protection in the LMD Ethernet-based MDrive product line in order to protect these devices from outside cyber attacks. By choosing to disable these features, the customer is acknowledging their acceptance of potential unauthorized outside access.

Intended Use

The product may only be used in compliance with all applicable safety regulations and directives, the specified requirements, and the technical data.

Prior to using the product, perform a risk assessment in view of the planned application. Based on the results, the appropriate safety measures must be implemented.

Since the product is used as a component in an entire system, ensure the safety of persons by means of the design of this entire system (e.g., machine design).

Operate the product only with the specified cables and accessories. Use only genuine accessories and spare parts.

⚠ DANGER

POTENTIAL FOR EXPLOSION

Install and use this equipment in non-hazardous locations only.

Failure to follow these instructions will result in death or serious injury.

Any use other than the use explicitly permitted is prohibited and can result in hazards. Electrical equipment should be installed, operated, serviced, and maintained only by qualified personnel.

Product Related

⚠ DANGER

HAZARD OF ELECTRICAL SHOCK, EXPLOSION, OR ARC FLASH

Remove all power from all devices before connecting or disconnecting inputs or outputs to any terminal or installing or removing any hardware.

Failure to follow these instructions will result in death or serious injury.

When the system is started, the drives are usually out of the operator's view and cannot be visually monitored.

⚠ DANGER

EQUIPMENT OPERATION

Only start the system if there are no persons in the zone of operation.

Failure to follow these instructions will result in death or serious injury.

Drives may perform unintended movements because of incorrect wiring, incorrect parameter settings, incorrect data, user programming bugs, or other errors. Further, interference (e.g., electromagnetic interference (EMI)) may cause unpredictable responses in the system.

⚠ WARNING

UNINTENDED MOVEMENT

- Carefully install the wiring in accordance with the electromagnetic compatibility (EMC) requirements.
- Do not operate the drive system with unknown parameter settings or data.

Failure to follow these instructions can result in death, serious injury, or equipment damage.

The designer of any control scheme must consider the potential failure modes of control paths and, for certain critical functions, provide a means to achieve a safe state during and after a path failure. Examples of critical control functions are emergency stop, overtravel stop, power outage, and restart.

⚠ WARNING

LOSS OF CONTROL

- The designer of any control scheme must consider the potential failure modes of control paths and, for certain critical control functions, provide a means to achieve a safe state during, and after a path failure. Examples of critical control functions are emergency stop and overtravel stop.
- Separate or redundant control paths must be provided for critical control functions.
- System control paths may include communication links. Consideration must be given to the implications of anticipated transmission delays or failures of the link.
- Each implementation of the product must be individually and thoroughly tested for proper operation before being placed into service.

Failure to follow these instructions can result in death, serious injury, or equipment damage.

For USA: Additional information, refer to NEMA ICS 1.1 (latest edition), "Safety Guidelines for the Application, Installation, and Maintenance of Solid State Control" and to NEMA ICS 7.1, (latest edition), "Safety Standards for Construction and Guide for Selection, Installation, and Operation of Adjustable-Speed Drive Systems"
Drives may perform unintended movements due to mechanical damage to connectors. Mechanical damage to the connectors may cause erratic or uncontrolled operation. Installation with a bent or broken mounting flange, motor shaft, or misaligned coupling may cause unintended behavior and possible destruction of system components as a result.

⚠ WARNING

LOSS OF CONTROL, ERRATIC OPERATION AND DESTRUCTION OF MECHANICS

- Do not drop product.
- Leave product in protective packaging until ready for use.
- Carefully inspect connectors prior to installation in a system for mechanical damage.
- Carefully inspect motor shaft and ensure shaft rotates freely without binding.

Failure to follow these instructions can result in death, serious injury, or equipment damage.

Opening LMD heat sinks can affect factory-set encoder alignment and impact Hybrid Motion Technology (hMT) performance. Tamper seals are used to ensure factory hardware settings remain unaltered and match the encoder alignment set during the manufacturing process.

⚠ WARNING

UNINTENDED EQUIPMENT OPERATION

- Do not open the LMD device housing for any reason.
- Contact a Novanta IMS applications representative if the product exhibits unexplained, erratic, or incorrect operation.

Failure to follow these instructions can result in death, serious injury, or equipment damage.

Radial (side) loading or axial (thrust) impacts on the shaft may result in premature bearing failure.

NOTICE

EXCESSIVE RADIAL OR AXIAL LOADS

- Do not exceed the maximum radial or side load limits on the motor shaft.
- Do not apply force that will pull the shaft from the motor as that may compress the pre-load washer, causing the rotor to move.
- Do not allow the shaft to be subject to impact forces or otherwise struck by external objects.

Failure to follow these instructions can result in equipment damage.

NOTE: For additional information, contact a Novanta IMS Applications representative.

ABOUT THIS MANUAL

Introduction

Read and understand the material contained in this manual before working on LMD products for the first time. Take particular note of the safety information (see “Safety Information” on page 5). Only qualified persons are allowed to work with the LMD product (see “Qualification of Personnel” on page 5).

A copy of this manual must be available for personnel who work with LMD products.

The purpose of this manual is to show the capabilities of the LMD and how to use it safely and properly. Follow the instructions within this manual to help:

- reduce risks,
- reduce repair costs and downtime of the LMD product,
- increase the service life of the LMD product, and
- increase reliability of the LMD product.

Terminology Derived from Standards

The technical terms, terminology, symbols and the corresponding descriptions in this manual, or that appear in or on the products themselves, are generally derived from the terms or definitions of international standards.

In the area of functional safety systems, drives and general automation, this may include, but is not limited to, terms such as safety, safety function, safe state, fault, fault reset, malfunction, failure, error, error message, dangerous, etc.

Among others, these standards include:

IEC/EN 61131-2:2007	Programmable controllers, Part 2: Equipment requirements and tests.
ISO 13849-1:2015	Safety of machinery: Safety-related parts of control systems. General principles for design.
EN 61496-1:2013	Safety of machinery: Electro-sensitive protective equipment. Part 1: General requirements and tests.
ISO 12100:2010	Safety of machinery: General principles for design - Risk assessment and risk reduction.
IEC/EN 60204-1:2006	Safety of machinery: Electrical equipment of machines - Part 1: General requirements.
ISO 14119:2013	Safety of machinery: Interlocking devices associated with guards - Principles for design and selection.
ISO 13850:2015	Safety of machinery: Emergency stop - Principles for design.
IEC/EN 62061:2015	Safety of machinery: Functional safety of safety-related electrical, electronic, and electronic programmable control systems.
IEC 61508-1:2010	Functional safety of electrical/electronic/programmable electronic safety-related systems: General requirements.
IEC 61508-2:2010	Functional safety of electrical/electronic/programmable electronic safety-related systems: Requirements for electrical/electronic/programmable electronic safety-related systems.
IEC 61508-3:2010	Functional safety of electrical/electronic/programmable electronic safety-related systems: Software requirements.
IEC 61784-3:2016	Digital data communication for measurement and control: Functional safety field buses.
2006/42/EC	Machinery Directive
2014/30/EU	Electromagnetic Compatibility Directive
2014/35/EU	Low Voltage Directive

In addition, terms used in the present document may tangentially be used as they are derived from other standards such as:

IEC 60034 series	Rotating electrical machines
IEC 61800 series	Adjustable speed electrical power drive systems
IEC 61158 series	Digital data communications for measurement and control – Fieldbus for use in industrial control systems

Finally, the term, “zone of operation” may be used in conjunction with the description of specific hazards, and is defined as it is for a hazard zone or danger zone in the Machinery Directive (2006/42/EC) and ISO 12100:2010.

NOTE: The aforementioned standards may or may not apply to the specific products cited in the present documentation. For more information concerning the individual standards applicable to the products described herein, see the characteristics tables for those product references.

Writing Conventions and Symbols

Work Steps

Work steps must be performed consecutively. Work steps will be numbered in order of expected operation.

A response to a work step may be indicated. This allows verification that the work step has been performed correctly.

Unless otherwise stated, the individual steps must be performed in the specified sequence.

Bulleted Lists

The items in bulleted lists are sorted alphanumerically or by priority. Bulleted lists are structured as follows:

- Item 1 of bulleted list
- Item 2 of bulleted list
  - Subitem for 2
  - Subitem for 2
- Item 3 of bulleted list

Parameters

Parameters are shown as follows

RC Motor Run Current

Units of Measure

Measurements are given in both imperial and metric values. Metric values are given in parenthesis unless otherwise indicated.

Examples:

1.00 in (25.4 mm)
100 oz-in (70.6 N-cm)

Documentation and Literature References

This document should be used in conjunction with the following documents:

- Ethernet/IP Fieldbus Manual
- MODBUS/TCP Fieldbus Manual
- Profinet IP Fieldbus Manual
- MCode Programming and Reference Manual
- LMD Software Suite (LSS) Manual

The latest versions of these manuals can be downloaded from:

https://novantaims.com/dloads/product-literature/manuals-3/

Website Directory

NOTE: Direct links are subject to change as website and search engine updates occur. Each of the websites below can also be accessed through menu options on the Novanta IMS Main Page: https://novantaims.com/

Downloads:
https://novantaims.com/dloads/

Resources:
https://novantaims.com/resources/

Warranty:
https://novantaims.com/warranty-and-disclaimer/

Certifications and Listing Information:
https://novantaims.com/dloads/certificationssustainability/

Contact and Support:
https://novantaims.com/contacts/

CyberSecurity Information:
https://novantaims.com/all-products/cybersecurity/

Knowledge Based Solutions:
https://novantaims.com/resources/troubleshooting/

Documentation Feedback

To provide feedback on this or any Novanta IMS documentation, submit all comments, corrections, or concerns to the following e-mail address.

documentation@imshome.com

Please include the following information:

- Document number and revision/print date
- Detailed description of the issue or concern
- Contact information

Chapter 1:
Introduction

What's in this Chapter?

This chapter includes the following topics:

Topic	Page
About This Product	12
Unit Overview	12
Components and Interfaces	13
Name Plate	15
Part Number Identification	16

About This Product

This manual is valid for the NEMA 17 (42mm) Liberty MDrive (LMD) Ethernet products with pluggable connectors. This chapter lists the type codes for these products. The type code can be used to identify whether the product is a standard product or a customized model.

Unit Overview

The LMD Ethernet TCP/IP consists of a stepper motor and integrated electronics. The product integrates interfaces, drive and control electronics, and the power stage. There are three basic control modes:

Closed Loop with hMT**:** Loop is closed by a 1000-line (4000 edge) magnetic encoder. May be operated as:

- **hMT off:** standard encoder functions for position and stall monitoring
- **hMT on:** enhanced closed loop functions such as anti-stall and position maintenance.

Absolute with hMT**:** Closed loop with multi-turn absolute encoder, which will retain/update position information upon loss/removal of power. Standard encoder and hMT features will function as on a closed loop model. Refer to Appendix D on page 77 for details.

Open Loop**:** Standard open loop stepper control.

LMD Ethernet TCP/IP Products (LMDxE)

Included protocols on all Ethernet LMDxE devices include the Ethernet/IP, Profinet IO, MODBUS/TCP, and MCode/TCP on a single device.

Setup parameters are set via the fieldbus interface using a software utility, available for download from:
https://novantaims.com/dloads/

LMD Ethernet TCP/IP Protocols

Ethernet/IP

The LMD Ethernet may be used as a fully ODVA compliant Adapter class device on Ethernet/IP networks.

MODBUS/TCP

The LMD Ethernet may be used in MODBUS/TCP networks, a standard open industrial convention supported by a variety of machine components, such as programmable controllers, drives and controls, I/O modules, and switches.

Profinet IO

The LMD Profinet may be used as an IO-DEVICE on Profinet networks with Siemens PLCs. Motion commands, variables, and flags from the standard MCode control language are mapped to input and output registers of the device. There are 38 output registers and 34 input registers.

MCode/TCP

The LMD Ethernet TCP/IP products are fully programmable motion control systems allowing for complex program and I/O interaction. The following operating modes may be used interchangeably:

- **Immediate Mode:** In immediate mode, also known as streaming commands, the device will respond to 1 and 2 character ASCII commands sent via the Ethernet interface, available as part of the LSS.
- **Program Execution Mode:** In program execution mode, the device may be programmed with multiple functions, subroutines, and process interactions using the MCode programming language, which is made up of 1 and 2 character ASCII mnemonics. Stored programs may be executed by:
  - using an input configured as a start input
  - upon start up by labeling a program "**`LB SU`**"
  - immediate mode command.

Components and Interfaces

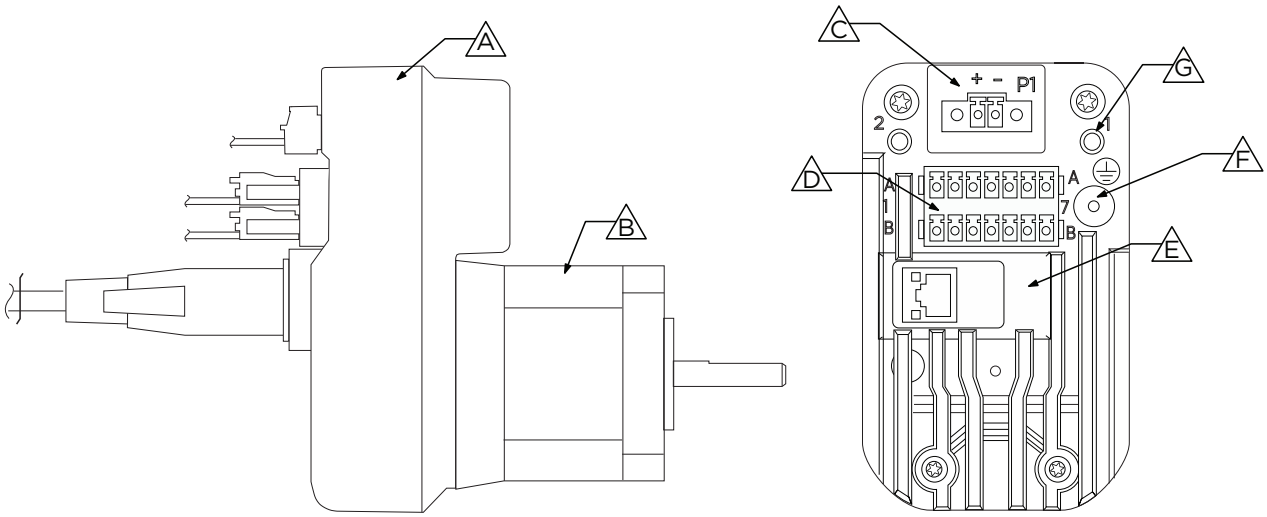

(A) Electronics housing
(B) Two phase stepper motor
(C) DC power interface
(D) Multifunction interface
(E) Ethernet RJ45 interface
(F) Protective earth
(G) LED indicators

Components

Motor

The motor is a two phase brushless stepper motor. The step angle of the motor is 1.8°.

Electronics Housing

The electronics system is comprised of control electronics and power stage.

The drive system is controlled by streaming commands via the service interface, embedded programming, or by pulse and direction input signals.

Interfaces

DC Power Supply Voltage

The supply voltage **VDC** supplies the control electronics and the power stage of the drive.

The ground connections of all interfaces are galvanically isolated with the exception of the analog input. For more information on ground connections and protection against reverse polarity, see "Ground (Earth) Design" on page 41.

Multifunction I/O Interface

The multifunction I/O interface operates at the following signal levels:

- +12V to +24V Aux-Power input to supply power to logic circuits in the event of main supply interruptions.
- +5V to +24V input signals (opto-isolated)
- 5.5 mA output signal (opto-isolated)
  NOTE: For information on how to increase the Output current, refer to "Output 3" Knowledge Based Solutions, available from:
  https://novantaims.com/resources/troubleshooting/
- 12-bit analog signal (not isolated)

The +5V to +24V input signals are programmable as general purpose or to predefined functions.

The output is a 5.5 mA signal output, which can be defined as a high speed trip.

The reference voltage or current that is applied to the analog input can be used for a number of programmatically defined operations.

Ethernet Interface

The service interface provides a connection to an Ethernet network.

Commissioning software is used to configure the device IP address and subnet mask. The Ethernet Interface is available via the LSS Ethernet firmware upgrades are performed through the Ethernet Interface.

NOTE: Additional setup will be required for initial setup on devices with CyberSecurity enabled. Devices with CyberSecurity enabled will have a "CSE" marking on the packaging and product label. For additional information on CyberSecurity, refer to:
https://novantaims.com/all-products/cybersecurity/

Protective Earth

Protective earth provides a means of grounding to the device chassis.

Name Plate

The name plate has the following information:

(1) Part number
(2) Nominal voltage
(3) Max. Holding torque
(4) Maximum required input current
(5) Serial number
(6) Ethernet MAC address
(7) Date of manufacture
(8) Communication interface
(9) Data Matrix code
(10) CyberSecurity Enabled indication
(11) Ingress Protection Rating

Part Number Identification

LMD Rotary Motor

The following graphic displays a breakdown of the LMD rotary motor part number identification.

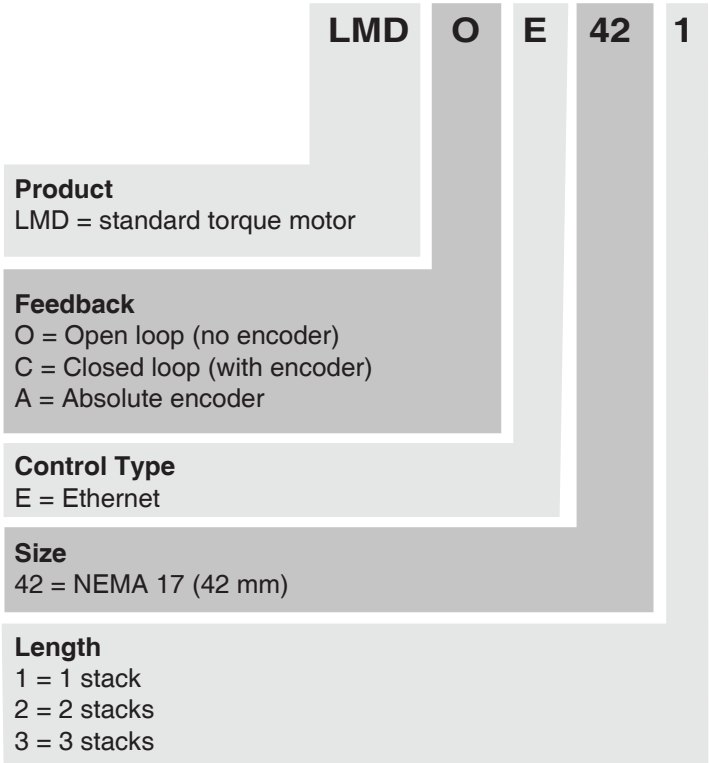

LMD External Linear Actuators

The following graphic displays a breakdown of the LMD external linear actuator part number identification.

LMD O E 42 1 P -L A 3 M 030 G T

Product
LMD = standard torque motor

Feedback
O = Open loop (no encoder)
C = Closed loop (with encoder)
A = Absolute encoder

Control Type
E = Ethernet

Size
42 = NEMA 17 (42 mm)

Length
1 = 1 stack

Connector Style
P = Pluggable, IP20

Linear actuator
-L = Linear

Screw lead / pitch (travel/rev)
A = 0.250″ / 6.35mm
B = 0.125″ / 3.175mm
C = 0.063″ / 1.60mm

Shaft style
3 = External

Screw end finish
M = Metric threaded
U = UNC threaded
S = Smooth
Z = None

Screw length
available in 0.1” increments
030 = Minimum 3.0″ / 76.2mm
180 = Maximum 18.0″ / 457.2mm

Nut
G = General purpose
A = Anti-backlash

Coating
T = Teflon®
Z = None

LMD Electric Cylinders (eCylinders)

The following graphic displays a breakdown of the LMD eCylinder part number identification.

LMD O E 42 1 P -C S A 020 M NN

Product
LMD = standard torque motor

Feedback
O = Open loop (no encoder)
C = Closed loop (with encoder)
A = Absolute encoder

Control Type
E = Ethernet

Size
42 = NEMA 17 (42 mm)

Length
1 = 1 stack

Connector Style
P - Pluggable, IP20

Linear actuator
-C = Electric cylinder

Nut
S = PEEK Blend

Lead / Pitch (travel/rev)
A = 0.100” / 2.54mm
B = 0.250” / 6.35mm
C = 0.500” / 12.70mm
D = 1.000” / 25.40mm

Stroke length
available in 0.1” increments
020 = Minimum 2.0″ / 50.8mm
180 = Maximum 18.0″ / 457.2mm

Mounts
M = Flange mounts
F = Foot mounts

Options
NN = Reserved

Chapter 2:
Technical Data

What's in this Chapter?

This chapter contains information on the ambient conditions and on the mechanical and electrical properties of the device family and accessories.

This chapter includes the following topics:

Topic	Page
Certifications	20
Environmental Conditions	20
Mounting Data	22
Mechanical Data	24
Electrical Data	28
Rotary Motor Data	32
External Linear Actuator Data	33
Electric Cylinder Specifications	35

Certifications

Certification	Regulation #
RoHS[1]	2011/65/EU
EMC	2004/108/EC
REACH	EC 1907/2006
UL	UL 1004-1, UL 1004-3 CSA C22.2 No. 100 CSA C22.2 No. 77

1 For additional information regarding RoHS certifications, contact a Service Representative at etech@imshome.com or call +1 (860) 365-3907."

A current list of certifications and compliance information can be viewed at: https://novantaims.com/dloads/certificationssustainability/

Environmental Conditions

Ambient Operating Conditions

The maximum permissible ambient temperature during operation depends on the distance between the devices and the required power. Reference "Installation" on page 43 for pertinent instructions.

The following relative humidity is permissible during operation.

Operating temperature[1]	[°C (°F)]	-20 ... 50 (-4 ... 122) (no icing)
Temperature variation	[°C (°F) min]	0.5
Humidity	[%]	5 ... 95 (non-condensing)

1 If the product is to be used in compliance with UL 508C, note the information provided in chapter 3.6 "Conditions for UL 508C".

Storage and Transport

The environment during transport and storage must be dry and free from dust. The maximum vibration and shock load must be within the specified limits.

Temperature	[°C (°F)]	-25 ... 70 (-13 ... 158)
Temperature variation	[°C (°F) min]	-25 ... 30 (-13 ... 86)
Humidity	[%]	5 ... 95 (non-condensing)

Temperature Maximums

Power stage[1]	[°C (°F)]	85 (185)
Motor[2]	[°C (°F)]	100 (212)

1 May be read via parameter
2 Measured on the surface of the motor laminations

Installation altitude

The installation altitude is defined as height above sea level

Installation altitude[1]	[ft (m)]	3280 (1000)

1 Installation above 3280 (1000) may require derating output current and maximum ambient temperature.

Vibration and Shock

Vibration, sinusoidal	m/s^2	10	IEC 60721-3-2
Shock, non-sinusoidal	m/s^2	100	IEC 60721-3-2

EMC

Emission	EIC61800-3 (Category C2)
Noise immunity	IEC61000-6-2

IP Degree of Protection

The product has the following IP degree of protection as per EN 60529.

Motor Style	NEMA 17 (42 mm)
Rotary	IP20
Linear Actuators	IP20
Electric Cylinders	IP20

The total degree of protection is determined by the component with the lowest degree of protection.

NOTICE

INOPERABLE EQUIPMENT

Ensure that the NEMA flange of the motor is properly sealed for any LMD Rotary M12 connector products used in IP65 rated applications.

Failure to follow these instructions can result in equipment damage.

Mounting Data

Mounting Positions

NOTE: Unless otherwise stated, all drawing measurements are in inches (mm) ±0.005" (0.13mm).
Drawings are not to scale.

⚠ CAUTION
AXIAL AND RADIAL LOADING OF THE SHAFT Mounting of the load to the shaft must be done with regard to the radial and axial load limits of the motor **Failure to follow these instructions can result in injury or equipment damage.**

The following mounting positions are defined and approved as per EN 60034-7:

- IM B5 drive shaft horizontal
- IM V1 drive shaft vertical, shaft end down
- IM V3 drive shaft vertical, shaft end up

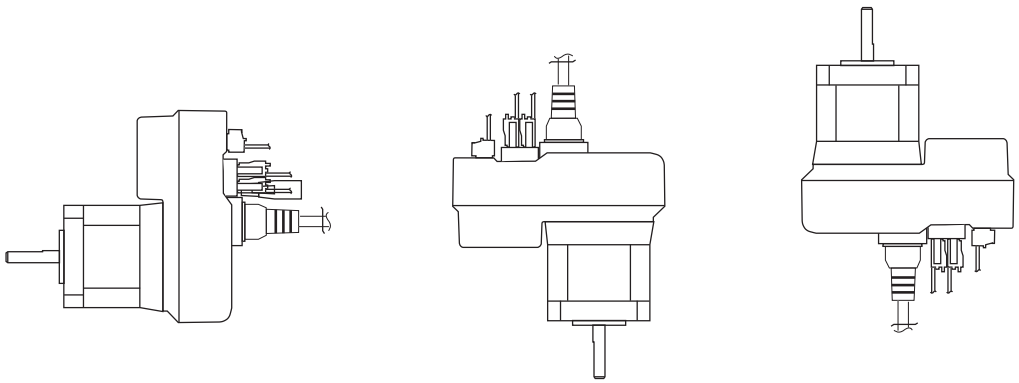

IM B5 IM V1 IM V3

Mounting (Rotary Units and External Linear Actuators)

Mounting the LMDXE42X uses four (4) M3 x 0.5 screws on a bolt circle diameter (BCD) of 1.725" (43.82 mm). The length of the screws will be determined by the thickness of the mounting material plus a maximum of 0.140" (3.56 mm) into the motor housing.

The tightening torque of the screws is 7.8 lb-in (9 kg-cm). The following graphic shows the rotary and actuator hole pattern.

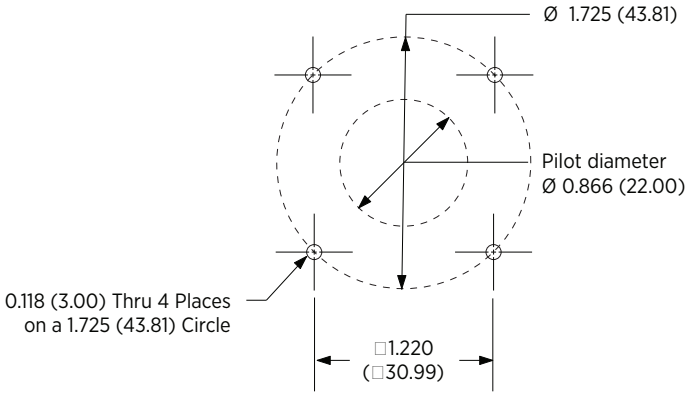

Mounting (Electric Cylinder with Flange Mount)

The electric cylinder flange mount option has front and rear flange plates for mounting into the system. The following graphic shows the mounting hole dimensions for the flanges.

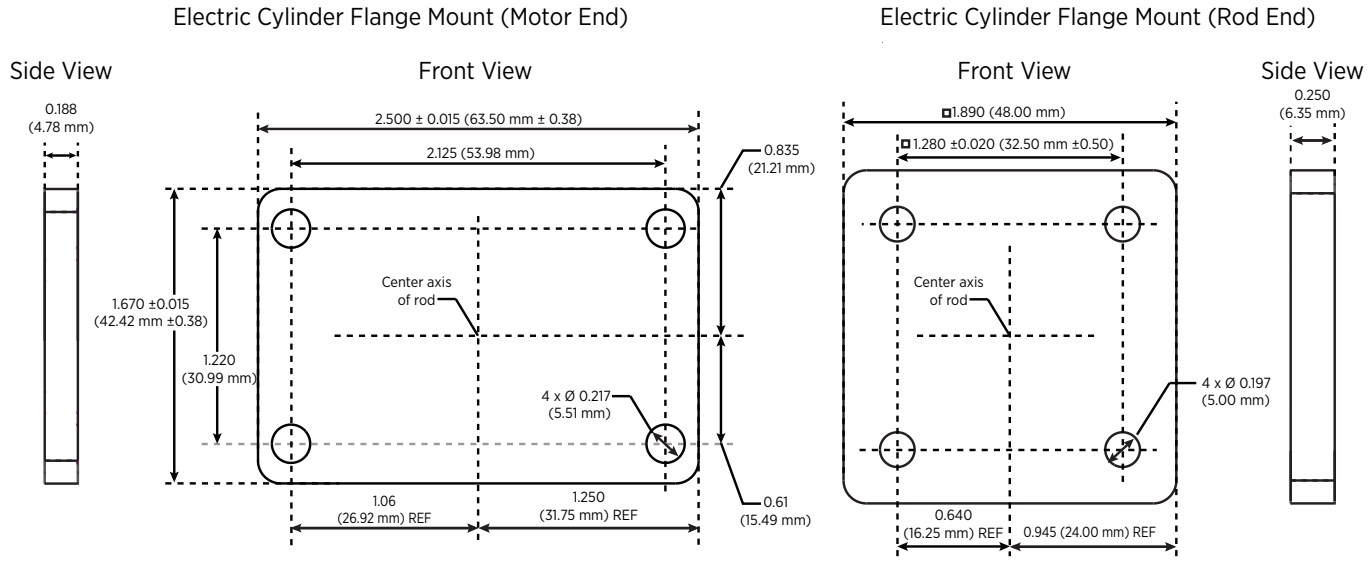

Mounting (Electric Cylinder with Foot Mount)

The foot mount option for the electric cylinder has front and rear foot mounting plates for mounting into the system. The following graphic shows the mounting hole dimensions for the foot mounting plates.

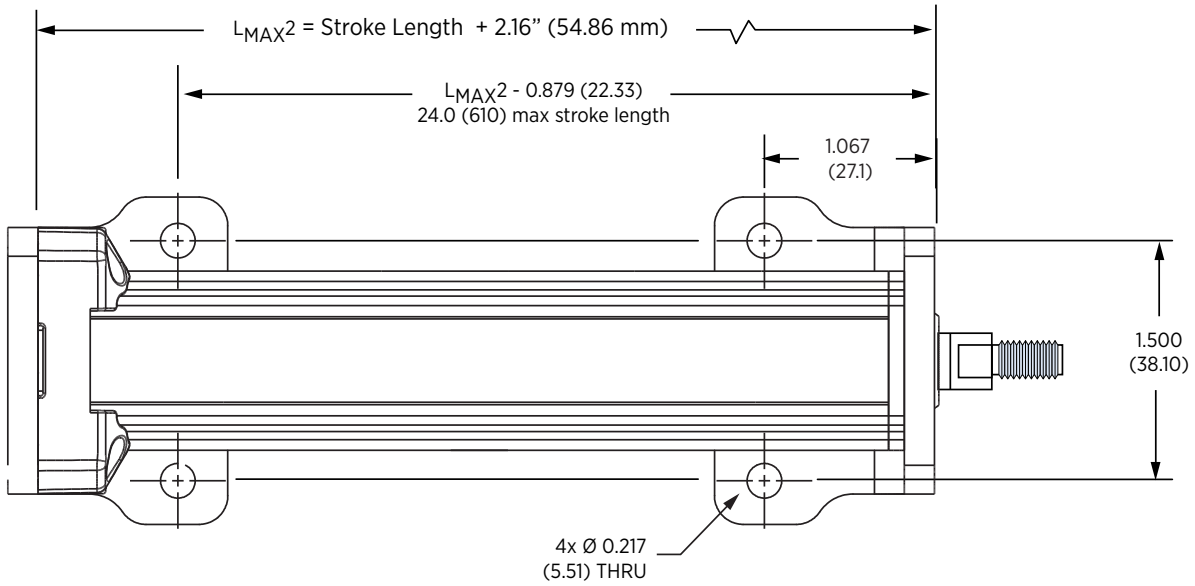

Mechanical Data

Radial (side) loading or axial (thrust) impacts on the shaft may result in premature bearing wear and eventual inoperability.

⚠ CAUTION

EXCESSIVE RADIAL OR AXIAL LOADS

- Do not place unsupported radial or side loads on the motor shaft.
- Do not allow the shaft to be subject to impact forces or otherwise struck by external objects.

Failure to follow these instructions can result in injury or equipment damage.

Rotary Dimensions

The following graphic shows the dimensions [inches (mm)] for the rotary motor.

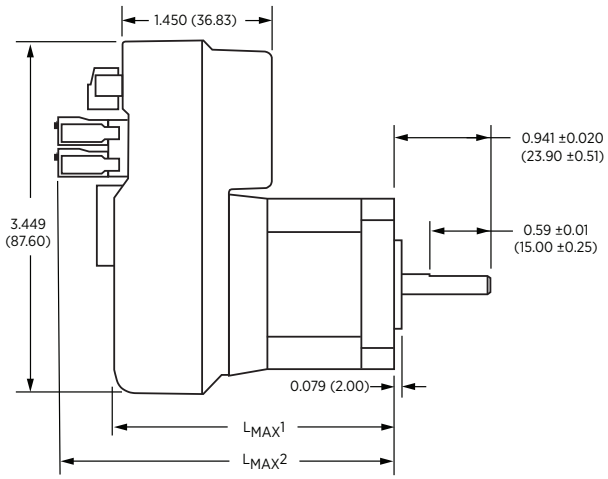

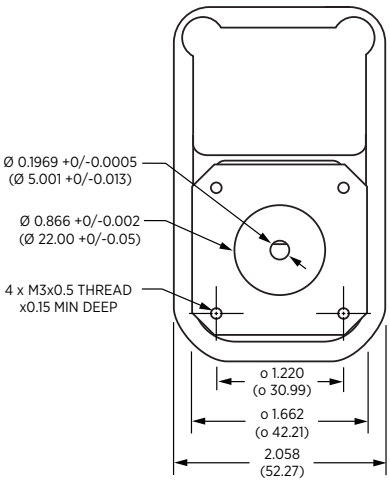

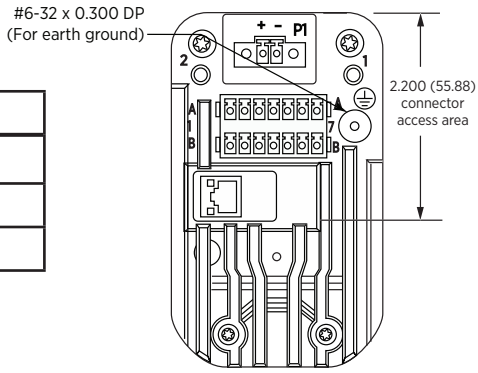

Motor Stack Length		LMAX1	LMAX2
Single	in (mm)	2.48 (63.0)	3.22 (81.8)
Double	in (mm)	2.71 (68.8)	3.46 (88.0)
Triple	in (mm)	3.04 (77.2)	3.78 (96.0)

External Linear Actuator Dimensions

The following graphic shows the external linear actuator dimensions of the NEMA 17 (42 mm) [inches (mm)].

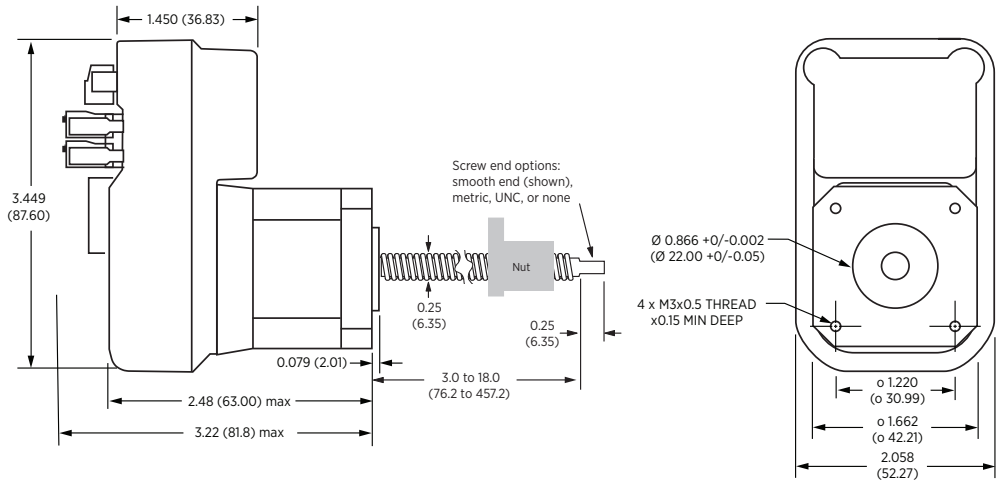

For back chassis dimensions and connector layout, refer to “Rotary Dimensions” on page 24 .

Calculating Screw Length:

Screw Length = Mounting Surface Plate Thickness + Nut Length + Desired Stroke Length

Calculating Available Stroke Length:

Stroke Length = Screw Length – Nut Length – Mounting Surface Plate Thickness

The following graphic shows the linear screw dimensions and pitch information.

Screw Lead and Nut Specifications

Screw	Travel	Per rev	Per full step
A	in (mm)	0.25 (6.35)	0.00125 (0.03175)
B		0.125 (3.175)	0.00063 (0.0160)
C		0.063 (1.60)	0.00031 (0.00787)

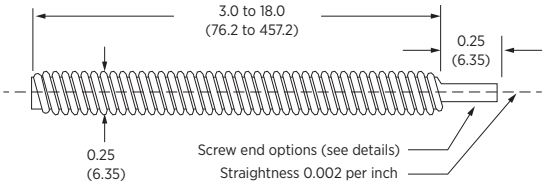

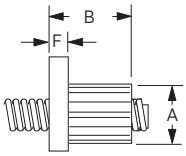

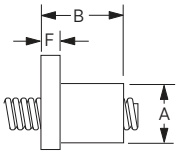

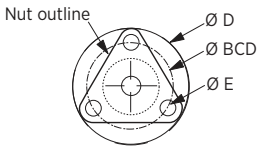

Screw end details

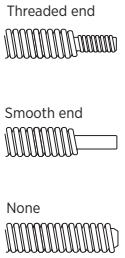

Metric end:
M4 x 0.7mm
thread to within 0.03”/
0.76 mm of shoulder

UNC end:
#8-32 UNC-2A thread
to within 0.03”/
0.76 mm of shoulder

Ø 0.1967” ±0.001
Ø 5 mm ±0.003

inches (mm)	A	B	D	E	F	BCD	drag torque	load limit
General purpose	0.50 (12.7)	0.75 (19.1)	1.0 (25.4)	0.14 (3.6)	0.15 (3.81)	0.75 (19.1)	free wheeling	25 lbs (11 kg)
Anti-backlash	0.50 (12.7)	0.9 (22.86)	1.0 (25.4)	0.14 (3.6)	0.18 (4.57)	0.75 (19.1)	1-to-3 oz-in / 0.7-2.1 Ncm	5 lbs (2 kg)

Electric Cylinder Mechanical Specifications

Electric cylinder range of motion is limited by the stroke length with the cylinder rod end acting as a hard stop. Running the cylinder into a hard stop can damage the internal components of the cylinder.

NOTICE

RUNNING INTO A HARD STOP AND MECHANICAL DAMAGE

- Use limit sensors to limit the range of motion.
- Do not execute a motion that will exceed the stroke length of the device.
- Do not use the product in applications where excessive external force or impact force is applied to the rod end.

Failure to follow these instructions can result in equipment damage.

Cylinder Travel Specifications

			Screw A	Screw B	Screw C	Screw D
Screw	Lead	inches	0.100	0.250	0.500	1.000
		mm	2.54	6.35	12.7	25.4
	Diameter	inches	0.25	0.25	0.25	0.25
		mm	6.35	6.35	6.35	6.35
Travel	Per rev	inches	0.375	0.20	0.167	0.0833
		mm	9.525	5.08	4.233	2.116
	Per full step	inches	0.00125	0.0013	0.0025	0.0050
		mm	0.03175	0.03302	0.0635	0.127

Flange Mounting Plates

The following graphic shows an LMD electric cylinder with the flange mounting option.

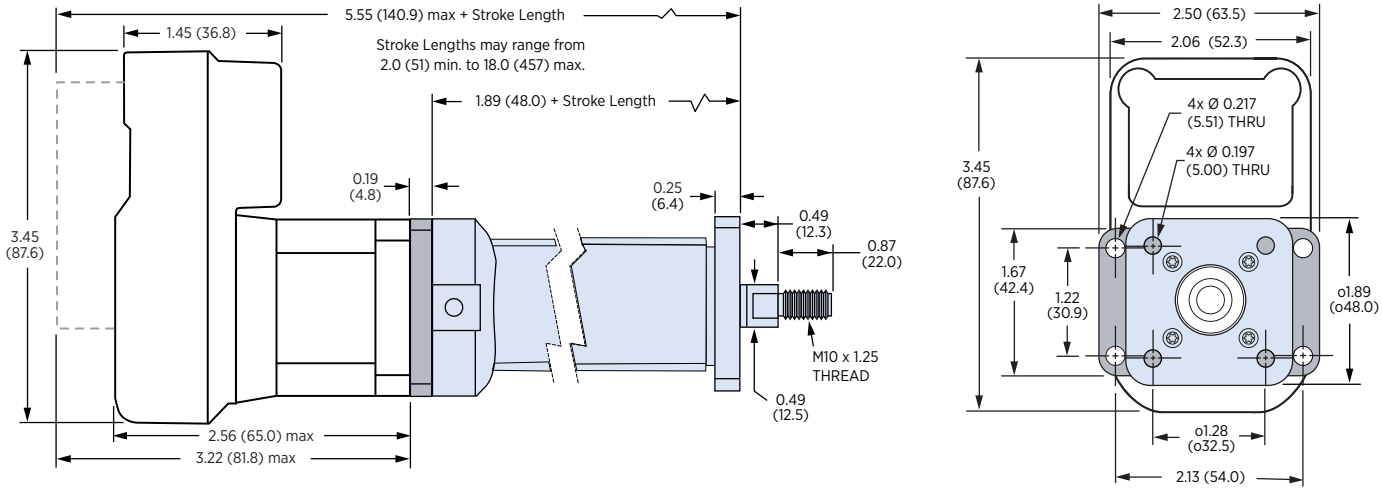

Motor Stack Length	$L_{MAX}1$	$L_{MAX}2$
Single in (mm)	SL + 5.5” (141 mm)	SL + 1.83” (46.5 mm)

SL = Stroke length (2.0” to 18.0” in 0.01” increments)

Foot Mounts

The following graphic shows the dimensions for the LMD electric cylinder with the foot mounting option.

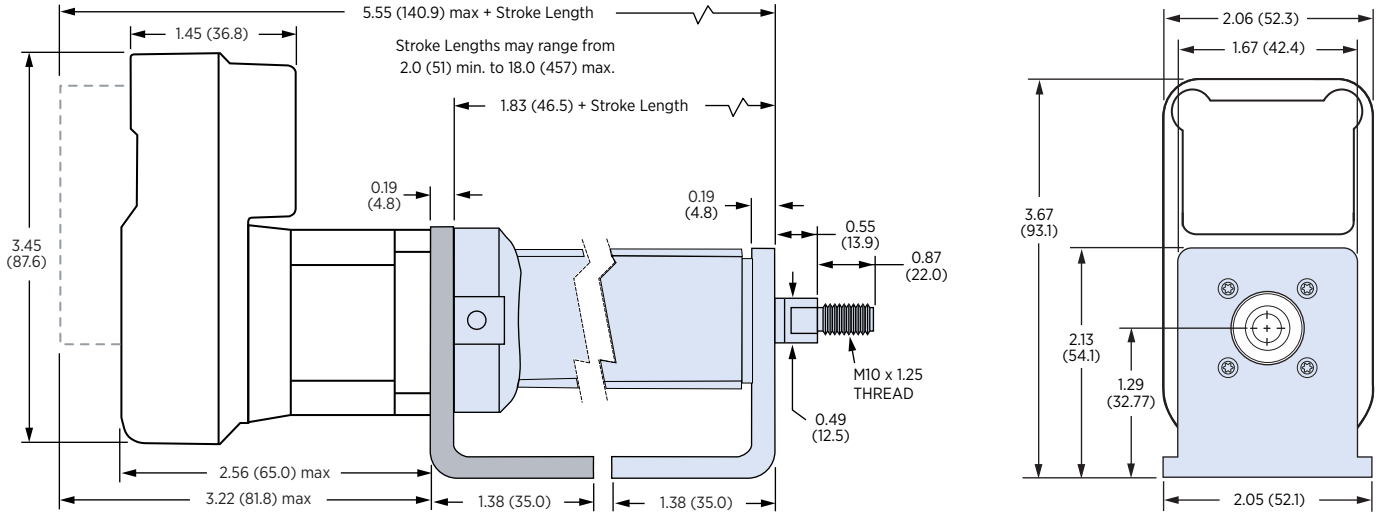

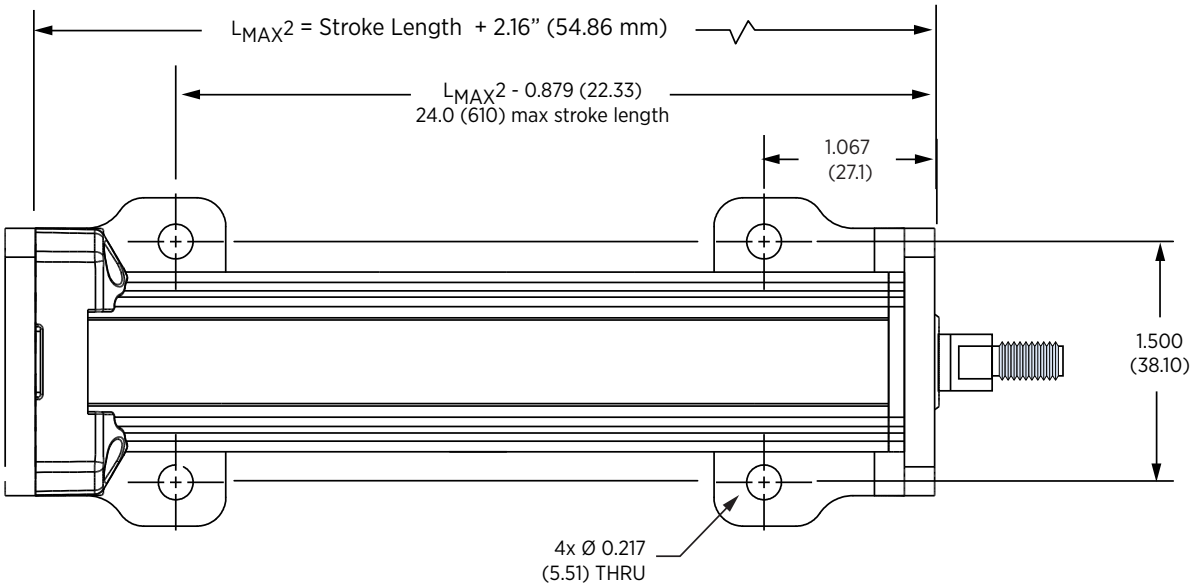

Motor Stack Length	$L_{MAX}1$	$L_{MAX}2$
Single in (mm)	SL + 5.5" (141 mm)	SL + 1.83" (46.5 mm)

SL = Stroke length (2.0" to 18.0" in 0.01" increments

Electrical Data

This section provides an overview of the LMD connection specifications and LED status information. For pin assignment and installation information, refer to Chapter 4, “Installation” on page 43

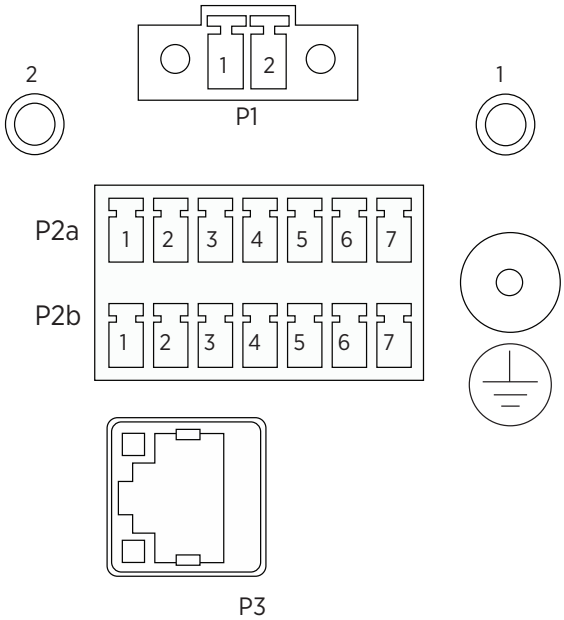

P1 Connector - Supply Voltage (VDC)

Refer to the following table for LMD•42 supply voltage information.

		LMD•42
Nominal voltage [1, 2]	[+Vdc]	24/48
Limit values min/max [1, 2]	[+Vdc]	12/48
Ripple at nominal voltage	[+Vpp]	4.6
Max. current input	[A]	2.0

1 The actual power requirement is often significantly lower, because the maximum possible motor torque is usually not required for operation of a system.
2 UL 508C rating to 48 VDC, posted max ratings conforms to CE low voltage directive.

P2a and P2b Connectors - Multifunction Interface

Signal Inputs

The signal input functions are programmable in function. They may be used as sinking or sourcing based upon the bias of the **INPUT _ REFERENCE**.

Voltage range	[+Vdc]	5 ... 24
Input current (5V)	[mA]	8.7
Input current (24V)	[mA]	14.6
Input frequency	[kHz]	5
Isolation		Galvanic
Protection class		III

Analog Input

NOTE: Not available on LMD Absolute Closed Loop models. Refer to Appendix D on page 77 for more information.

Voltage mode 0 - 5	[Vdc]	0 ... 5
Voltage mode 0 - 10	[Vdc]	0 ... 10
Current loop mode	[mA]	0 ... 20
Resolution	[Bits]	12
Impedance by mode		
0 - 5 V	[MΩ]	5
0 - 10 V	[kΩ]	1.25
0 - 20 mA	[Ω]	5
Isolation		None

Signal Output

Voltage open-collector	[Vdc]	60
Voltage open-emitter	[Vdc]	7
Current open-collector	[mA]	5.5
Current open-emitter	[mA]	5.5
Isolation		Galvanic

Auxiliary Supply Voltage VDC

Auxiliary power is used to maintain power to the logic circuits and retain information stored in counters, registers and user variable in the event of system power loss. It is not a required connection.

Limit values min/max	[+Vdc]	12 ... 24
Ripple at nominal voltage	[+Vpp]	2.4
Max. current input	[mA]	200

P3 Connector - Ethernet Interface

RJ45

Standard RJ45 connector for CAT5/6 cabling capable of 10/100 network speeds. TCP/IP settings are modified using the TCP/IP Configuration Utility. Refer to the LSS Software Manual, available for download from: https://novantaims.com/dloads/

TCP/IP Settings		
Default IP	[IPv4]	192.168.33.1
Subnet mask		255.255.255.0

LED Indicators

The LMD TCP/IP product LED's will function differently depending on protocol.

NOTE: Synchronously flashing Red MS & NS LEDs indicate a CyberSecurity enabled unit that has not been initially setup. Refer to the following website for additional information: https://novantaims.com/all-products/cybersecurity/

Ethernet/IP (ODVA)

Color	State	Description
NS – Network Status (LED 2)		
None	Off	No power, no Ethernet connection
Red	Solid	Unrecoverable error detected
	Flashing	Recoverable error detected or I/O connection timed out
Green	Solid	Normal runtime operation (I/O connection allocated)
	Flashing	Device is idle or not allocated to a client (PLC)
Red/Green	Alternating	Power-up self test in progress
MS – Module Status (LED 1)		
None	Off	No power
Red	Solid	Unrecoverable error detected/Drive initialization error (MCode in upgrade mode)
	Flashing	Minor, recoverable interruption
Green	Solid	Normal drive operation
Red/Green	Alternating	Power-up self test in progress

Profinet-IO

Color	State	Description
NS – Network Status (LED 2)		
None	Off	No power
Red	Solid	Motion Controller driver initialized and operational
	Flashing	Motion drive error detected or drive is in MCode firmware upgrade mode
Green	Solid	Unrecoverable error detected - drive not responding
	Flashing	Minor, recoverable error detected
MS – Module Status (LED 1)		
None	Off	No power
Red	Solid	Profinet stack error detected
	Flashing	Profinet connection interrupted or disconnected
Green	Solid	Valid Profinet connection exists
	Flashing	Device does not have a valid Profinet connection

MCode/TCP

Color	State	Description
NS – Network Status (LED 2)		
None	Off	No power or no Ethernet port 503 connection
Red	Flashing	Power applied and Port 503 (MCode/TCP) connected
Green	Solid	Unrecoverable error detected
Red/Green	Alternating/Bi-color	Socket error or port 503 (MCode/TCP) disconnected
MS – Module Status (LED 1)		
Green	Flashing	With Port 503 is connected - Ethernet/IP application is active With Port 503 is disconnected - Profinet application is active

MODBUS/TCP

Color	State	Description
NS – Network Status (LED 2)		
No defined functions		
MS – Module Status (LED 1)		
None	Off	No power or no MODBUS/TCP port 502 connection
Red	Flashing	Port 502 (MODBUS/TCP) connected
Green	Solid	Unrecoverable error detected
Red/Green	Alternating/Bi-color	Socket error or port 502 (MODBUS/TCP) disconnected

Rotary Motor Data

Rotary Specifications

		Single	Double	Triple
Holding torque	oz-in (N-cm)	44(31)	58 (41)	88 (62)
Detent torque	oz-in (N-cm)	1.7 (1.2)	2.1 (1.5)	3.5 (2.5)
Rotor inertia	oz-in-sec^2 (kg-cm^2)	0.0005 (0.038)	0.0008 (0.057)	0.0012 (0.082)
Radial load limit:				
– End of shaft	lb (kg)	4.7 (2.0)	4.7 (2.0)	4.7 (2.0)
– Center of shaft flat	lb (kg)	6.5 (2.9)	6.5 (2.9)	6.5 (2.9)
– Center of shaft	lb (kg)	8.5 (3.8)	8.5 (3.8)	8.5 (3.8)
Axial load limit	lb (kg)@1500RPM	10 (4.5)	10 (4.5)	10 (4.5)
Weight	oz (g)	13.6 (385)	16 (454)	18.4 (522)

Rotary Performance

The graphics below show the speed-torque performance curves for an LMD•42 for the following test condition:
hMT OFF: 100% current 0.84 oz damper, inertia: 0.18589 oz-in^2

Single Stack Length

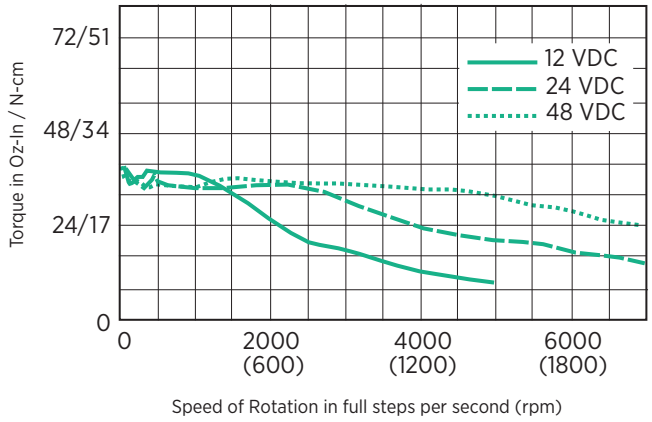

Double Stack Length

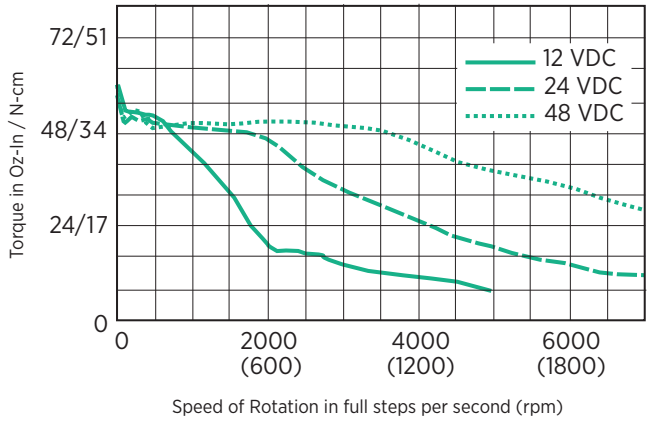

Triple Stack Length

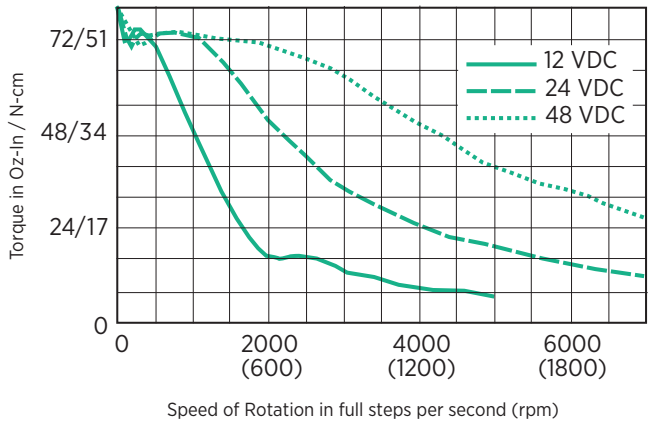

External Linear Actuator Data

The linear actuator motor delivers force in excess of the maximum rated load limit of the general purpose and anti-backlash nuts. Ensure that the selected nut's load limit is not exceeded.

NUT LOAD LIMIT

- General purpose nut limit: 60 lbs (27 kg)
- Anti-backlash nut limit: 25 lbs (11 kg)

Linear Actuator Specifications

The following table shows the external actuator specifications for the LMD•42.

Specifications		Units	Value
Rotor inertia		oz-in-sec^2	0.0005
		kg-cm^2	0.038
Maximum screw misalignment		degrees°	±1
Maximum thrust[1]	general purpose nut	lb	25
		kg	11
	anti-backlash nut	lb	5
		kg	2
Maximum repeatability	general purpose nut	in	0.005
		mm	0.127
	anti-backlash nut	in	0.0005
		mm	0.0127
Weight (without screw)		oz	13.6
		g	385

1 Performance data for maximum force/load is based on a static load and will vary with a dynamic load.

Linear Actuator Performance

The graphics below show the speed-force performance curves for an LMD•42.

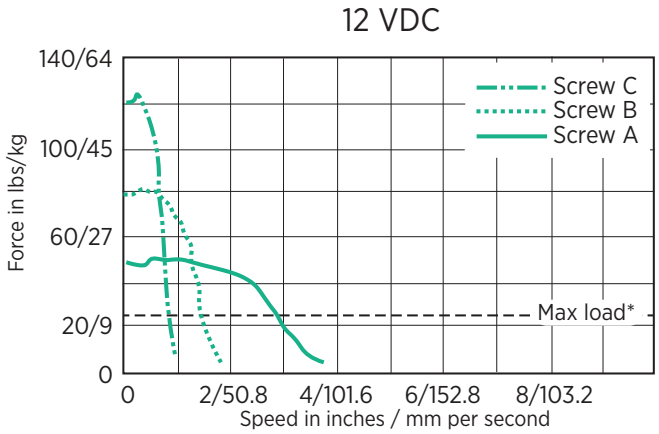

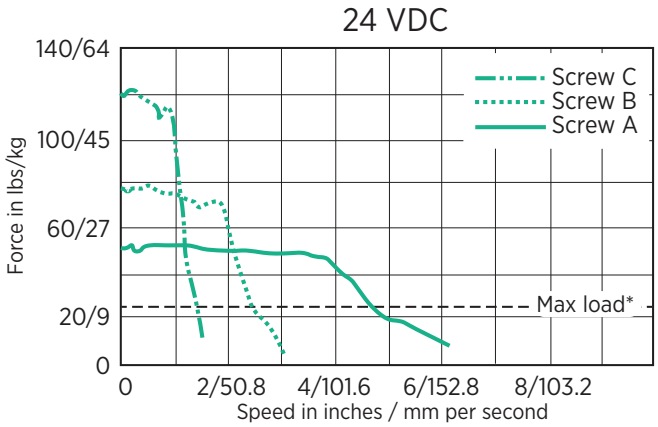

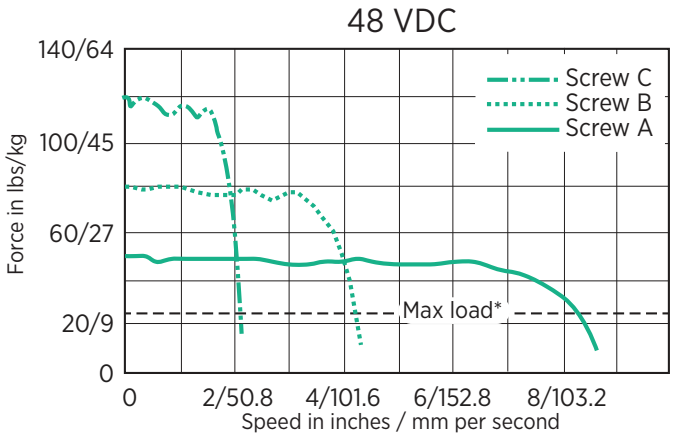

Screw key

Screw A - 0.25 (6.35 mm) per revolution

Screw B - 0.125 (3.175 mm) per revolution

Screw C - 0.063 (1.588 mm) per revolution

NOTE: Do not exceed the rated maximum thrust of the nut being used:

General purpose nut: 25 lbs (11 kg)

Anti-backlash nut: 5 lbs (2 kg)

Load limit is determined by the selected nut. Performance data for maximum force/load is based on a static load and will vary with a dynamic load.

Electric Cylinder Data

Electric Cylinder Specifications

Specifications		Units	Value
Rotor inertia		oz-in-sec^2	0.0005
		kg-cm^2	0.038
Maximum thrust [1]	PEEK blend nut	lb	225
		kg	102
Accuracy		in	0.0003
		mm	0.002
Backlash	PEEK blend nut	in	0.002
		mm	0.05
End play		inches @ lbs	0.002 @ 2
		mm @ N	0.05 @ 9
Weight (without screw)		oz	13.6
		g	385

1 Performance data for maximum force/load is based on a static load and will vary with a dynamic load.

Electric Cylinder Performance

SCREW A - 0.100” rev

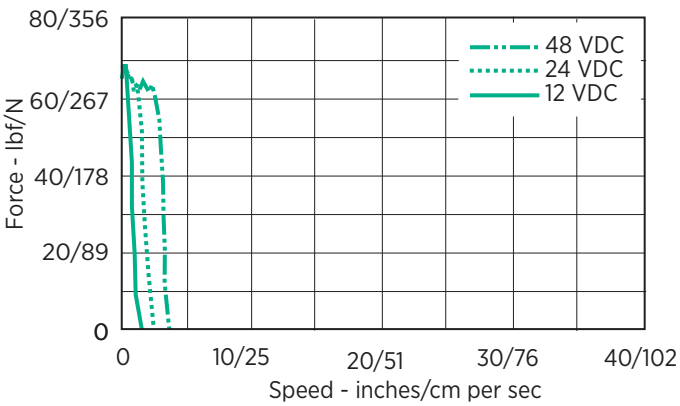

SCREW B - 0.250” rev

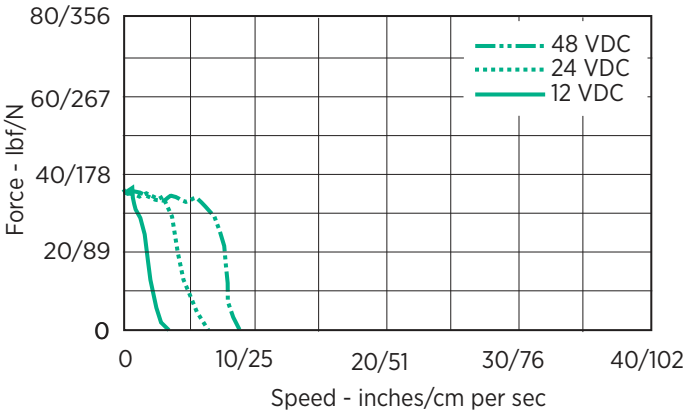

SCREW C - 0.500” rev

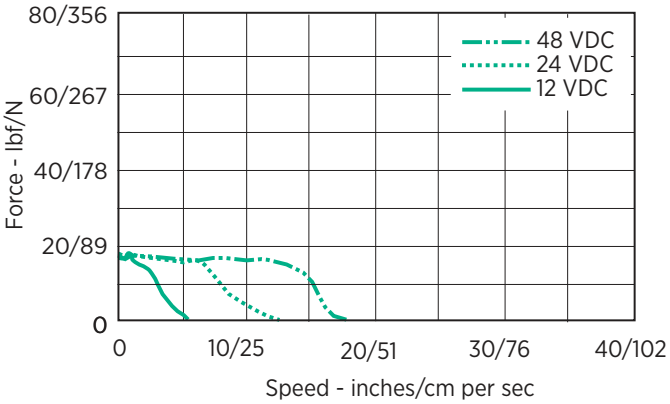

SCREW D - 1.000” rev

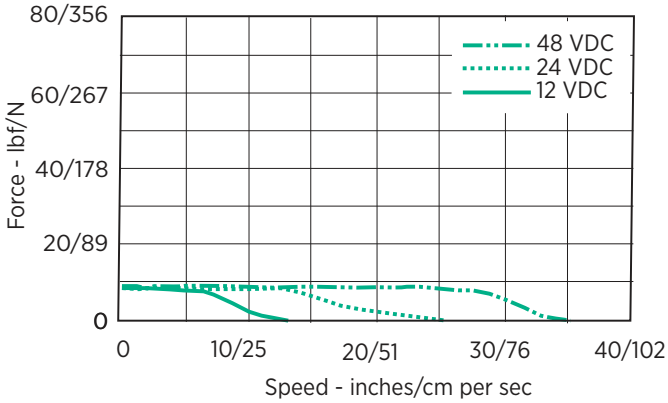

Chapter 3:
Engineering

What's in this Chapter?

This chapter contains information on the application of the product that is vital in the design phase.

This device will operate differently in each mode of operation. It is critical that all documentation be read completely. A clear understanding of how the device is to be employed must be present before attempting to install or commission the device.

This chapter includes the following topics:

Topic	Page
External Power Supply Units	37
Auxiliary Power Supply	40
Wiring and Shielding	40
Ground (Earth) Design	41
Monitoring Functions	42

External Power Supply Units

⚠ DANGER

ELECTRIC SHOCK CAUSED BY INCORRECT POWER SUPPLY UNIT

- Use a DC power supply unit that meets voltage requirements.
- Connect the negative output of the power supply unit to PE (ground).

Failure to follow these instructions will result in death or serious injury.

When working on power supply wiring and inserting or removing power connectors, it may cause unintended behavior and possible destruction of the system components.

GENERAL POWER SUPPLY PRACTICES

- Disconnect the primary side of the power supply to power down the DC supply.
- Do not connect or disconnect the power supply while power is applied.
- For battery operated systems, connect a “transient suppressor” across power switches to prevent arcs and high-voltage spikes.

Main Power Voltage +VDC

General

The power supply unit must be rated for the power requirements of the drive. The supply voltage and current can be found in the technical data.

Actual power requirements are often significantly lower since the maximum possible motor torque is usually not required for normal operation of a system.

When designing the system, note that the input current of the drive is higher during the motor acceleration phase than during constant movement.

Regeneration Condition

Note the following for drives with large external mass moments of inertia or for highly dynamic applications:

Motors return regeneration energy during deceleration or back driving/overhauling load. The DC bus can store a limited amount of energy in the capacitors. Connecting additional capacitors to the DC bus increases the amount of energy that can be stored.

If the capacity of the capacitors is exceeded, the excess energy must be discharged via an external braking resistor controller. If the application of the drive generates a regeneration condition, contact a member of the IMS Applications department for additional information at: etech@imshome.com.

Overvoltage conditions can be limited by adding a braking resistor with a corresponding braking resistor controller. This converts the regenerated energy to heat energy during deceleration.

Regeneration conditions resulting from braking or external driving forces may increase the **VDC** supply voltage to an unexpected level. Components may be damaged.

⚠ CAUTION

LOSS OF CONTROL DUE TO REGENERATION CONDITION

- Verify that all VDC consumers are rated for the voltage occurring during regeneration conditions (i.e., proximity sensors, photo sensors, etc.).
- Use only power supply units that will not be damaged by regeneration conditions.
- Use a braking resistor controller, if necessary. Regeneration must not exceed the current capacity of the drive.

Failure to follow these instructions can result in injury or equipment damage.

Power Supply Cabling

The following specifications will provide information to help protect against electromagnetic interference (EMI) and radio frequency interference (RFI). The actual cable type, wire gauge, shield type, and filtering devices used are dependent on the environment, application, and system.

⚠WARNING

UNINTENDED EQUIPMENT OPERATION DUE TO EMI AND RFI

- Do not exceed a DC power supply cable length of 50 feet (15.2 m) to an LMD.
- Always use shielded/twisted pairs for the LMD's DC power supply cable.

Failure to follow these instructions can result in death, serious injury, or equipment damage.

Cable length, wire gauge and power conditioning devices play a major role in the performance of the LMD.

The following graphic illustrates the recommended cable configuration for DC power supply cabling under 50 feet (15.2 m) long. If cabling of 50 feet (15.2 m) or longer is required, the additional length may be gained by adding an AC power supply cable..

Correct American Wire Gauge (AWG) wire size is determined by the current requirement plus cable length.

The graphic below shows DC power supply cabling under 50' (15.24 m).

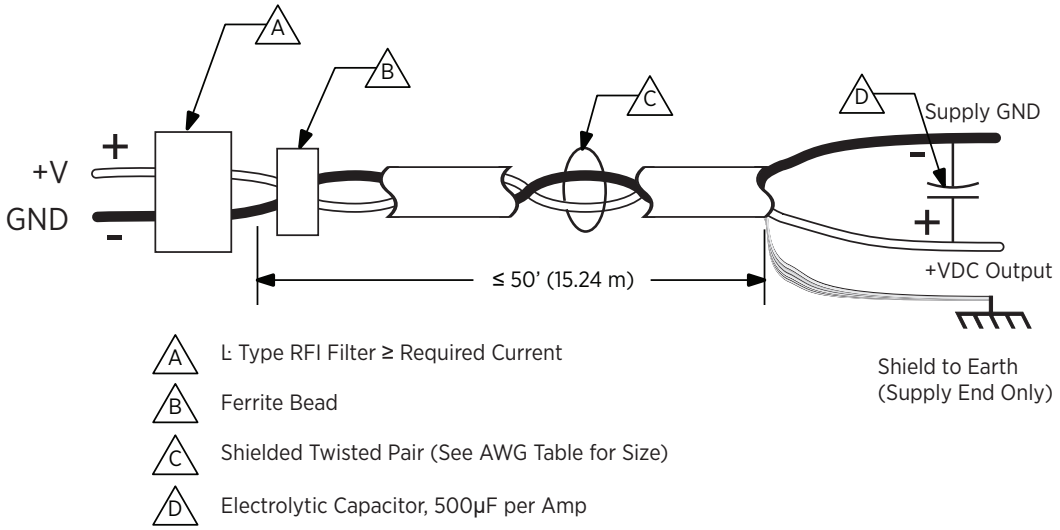

The graphic below shows power supply cabling 50’ (15.2 m) or greater, AC power to a full wave bridge.

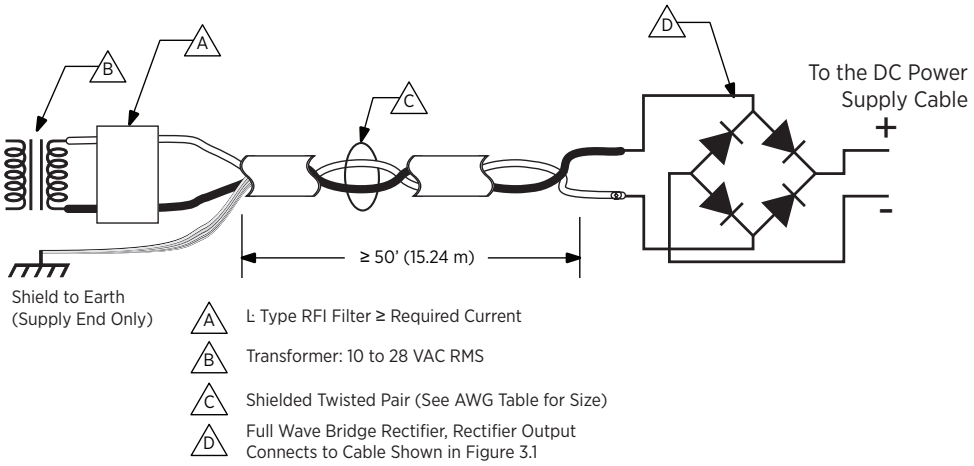

The graphic below shows power cabling 50 ft (15.2 m) or greater, AC power to an unregulated DC power supply.

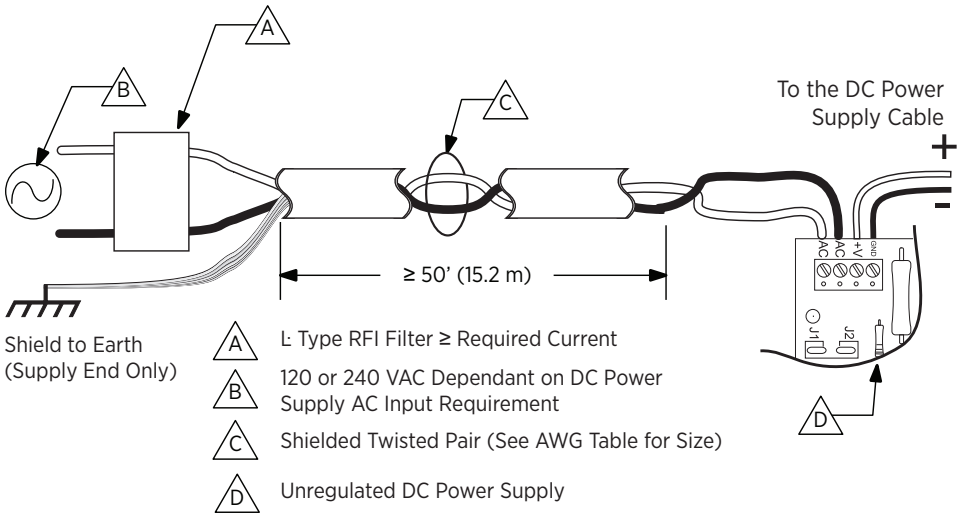

Wire Size

System EMI performance may be impacted by the wire size, length, and current.

Length [ft (m)]	10 (3.0)	25 (7.6)	50 (15.2)	75 (22.9)	100 (30.5)
Amps (peak)	Minimum AWG (mm^2)				
1	20 (0.5)	20 (0.5)	18 (0.75)	18 (0.75)	18 (0.75)
2	20 (0.5)	18 (0.75)	16 (1.5)	14 (2.5)	14 (2.5)
3	18 (0.75)	16 (1.5)	14 (2.5)	12 (4.0)	12 (4.0)
4	18 (0.75)	16 (1.5)	14 (2.5)	12 (4.0)	12 (4.0)

Auxiliary Power Supply

The auxiliary logic supply is an optional power supply used to provide power to the logic circuitry of the LMD in the event of main system power failure. This supply will retain data such as position.

There are no special considerations required when choosing this supply beyond:

Voltage ..... +12 to +24 VDC

Current ..... 200 mA/LMD

Wiring and Shielding

Electrical "noise" (interference) is always present in a system that involves high power and low signal circuitry. Regardless of the power configuration used in the system, there are some wiring and shielding rules that should be followed to keep signal-to-noise ratio (SNR) as small as possible.

Rules of Wiring

- Power Supply and Motor wiring should be shielded twisted pair, and these lines should not run parallel to signal carrying wires.
- Power ground return should be as short as possible.
- For installations which utilize separate electric motor drives and stepper motors, wiring between the driver and motor should be shielded twisted pairs using 20 gauge wire for motor current less than 4.0 amps and 18 gauge or better for motor current 4.0 amps or higher. A common mode choke may be required in each of the motor phase lines to reduce shield current levels.
- Power Supply wiring should be shielded twisted pairs. Use 18 gauge wires if load is less than 4 amps, or 16 gauge for more than 4 amps.
- Never use a "daisy-chain" power supply wiring scheme to system components. This type of power distribution will result in degraded system reliability and performance as a result of poor EMC and ground-loop issues. In cases where 'daisy-chaining" is unavoidable, the user is responsible for final system reliability and performance. The use of conservatively selected wire gauge and the use of decoupling capacitors
(i.e., a combination of capacitors to provide for acceptable low frequency and high frequency noise reduction) at each electronic drive should be considered as a minimum.

Rules of Shielding

- The shield must be tied to zero-signal reference potential. In order for shielding to be effective, it is necessary for the shield to be earthed or grounded.
- The shield must be connected so that shield currents drain to signal-earth.
- The shield should be tied to a single point to prevent ground loops.

The following graphic illustrates system power wiring.

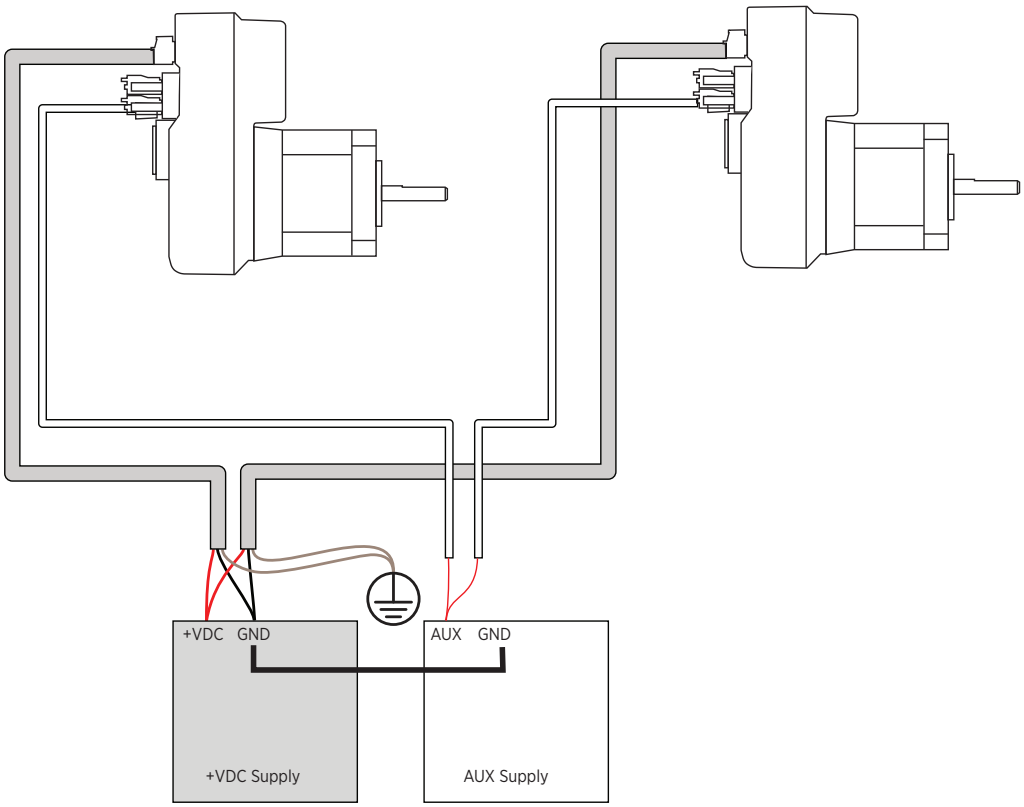

Ground (Earth) Design

The ground (earth) connections of all interfaces are connected, including the ground for the VDC supply voltage.

The exception to this is the logic ground connection of the I/O interface, which is optically isolated.

The following points must be considered when wiring the drives in a system:

- The voltage drop in the **VDC** power supply lines must be kept below 1 V. At higher ground potential differences between different drives, the communication and control signals may be affected.
- For larger distances between system components, the use of decentralized power supply units located close to the individual drives may be needed to supply **DC** voltage. The ground connections of the individual power supply units must be connected with the largest possible conductor cross section.
- If the master controller (e.g., PLC, industrial PC, etc.) does not have galvanically isolated outputs for the drives, verify that the current of the **DC** supply voltage has no path back to the power supply unit via the master controller. Therefore, the master controller ground may be connected to the **DC** supply voltage ground at a single point only. This is usually the case in the control cabinet. The ground contacts of the various signal connectors in the drive are therefore not connected; there is already a connection via the **DC** supply voltage ground.
- If the controller has a galvanically isolated interface for communication with the drives, the ground of this interface must be connected to the signal ground of the first drive. This ground may be connected to a single drive only to avoid ground loops.

Equipotential Bonding Conductors

Potential differences can result in excessive currents on the cable shields. Use equipotential bonding conductors to reduce currents on the cable shields. The equipotential bonding conductor must be rated for the maximum current flowing. Practical experience has shown that the following conductor cross sections can be used:

- AWG 5 (16 mm^2) for equipotential bonding conductors up to a length of 650 ft (200 m)
- AWG 4 (20 mm^2) for equipotential bonding conductors with a length of more than 650 ft (200 m)

Protective Earth

The LMD should be earthed to a common system earth point. Multiple earth points within a system may be at different potentials which can lead to recirculating currents (ground loops)

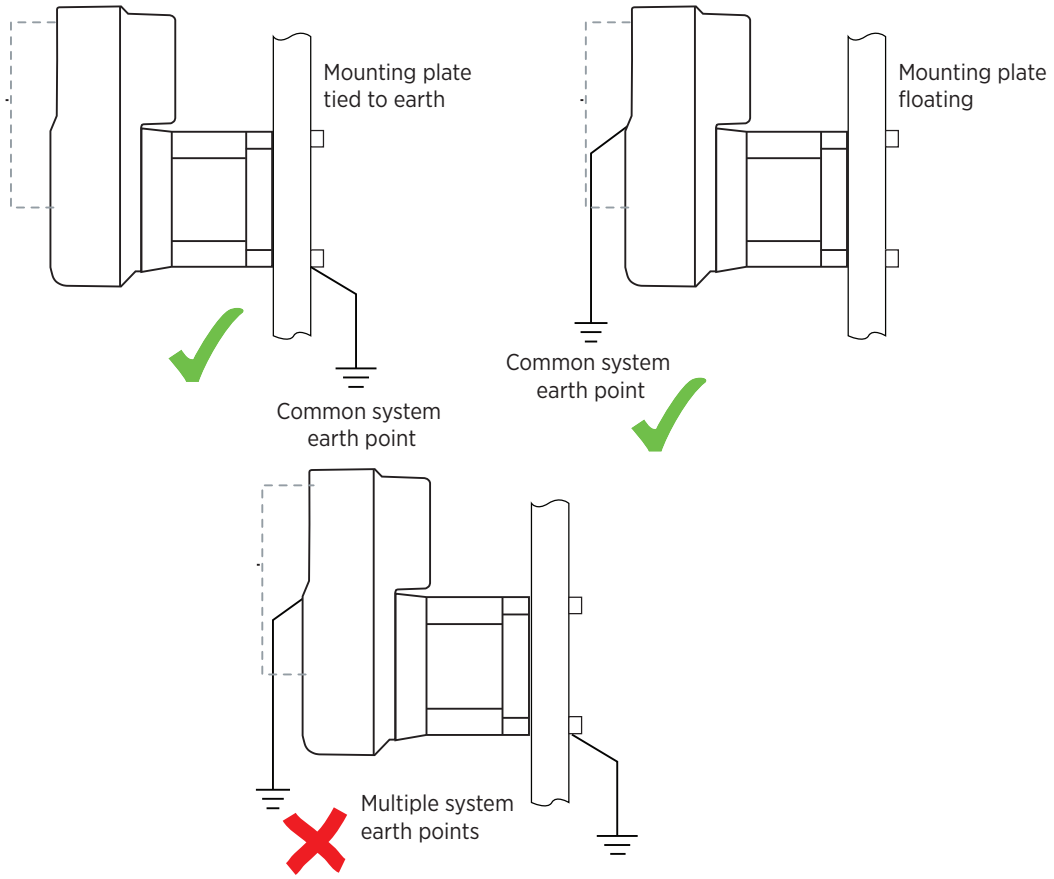

Monitoring Functions

Monitoring functions can help to guard the system and reduce events that may result in unintended equipment operation.

NOTE: These monitoring functions should not be used for safety-related functions.

The following monitoring methods are available:

1. **Software**: Internal temperature, input/output states, and moving, as well as other device conditions may be monitored using software via the service interface.
2. **Hardware:** Outputs and other device conditions may be monitored using signal outputs via the multifunction interface.

Chapter 4:
Installation

What's in this Chapter?

This chapter includes the following topics:

Topic	Page
Electromagnetic Compatibility, EMC	45
Mechanical Installation	46
Electrical Installation	48
Supply Voltage VDC Connection	49
Multifunction Interface Connection	51
Signal Input Circuits	52
Signal Output Circuit	55
Analog Input	56
Communication Interface Connection	57
Checking Wiring	57

⚠WARNING

INCORRECT INSTALLATION

Ensure the correct installation and maintenance of the system according to the instructions contained in the present document and other supporting documents.

Failure to follow these instructions can result in death, serious injury, or equipment damage.

The designer of any control scheme must consider the potential failure modes of control paths and, for certain critical functions, provide a means to achieve a safe state during and after a path failure. Examples of critical control functions are EMERGENCY STOP, over travel stop, power outage, and restart.

⚠WARNING

LOSS OF CONTROL

- Separate or redundant control paths must be provided for critical functions.
- System control paths may include communication links. Consideration must be given to the implication of unanticipated transmission delays or failures of the link.
- Observe all accident prevention regulations and local safety guidelines 1.
- Each implementation of the product must be individually and thoroughly tested for proper operation before being placed into service.

Failure to follow these instructions can result in death, serious injury, or equipment damage.

1 For USA: Additional information, refer to NEMA ICS 1.1 (latest edition), “Safety Guidelines for the Application, Installation, and Maintenance of Solid State Control” and to NEMA ICS 7.1 (latest edition), “Safety Standards for Construction and Guide for Selection, Installation and Operation of Adjustable-Speed Drive Systems”.

Always hold the plug housing to remove the connector, not the wiring.

- Supply voltage VDC: Remove the cabling by pulling the plug housing.
- Miscellaneous: Press in the locking levers on both sides of the connector while pulling the plug housing to remove each of the Multifunction Interface connections.
- Communication: Press in the locking tab on the connector head while pulling the plug housing to remove the Ethernet Communication connection.

NOTICE

ELECTROSTATIC DISCHARGE

- Do not touch any of the electrical connections or components.
- Prevent electrostatic charges, for example, by wearing appropriate clothing.
- If a circuit board must be touched, do so only on the edges.
- Move the circuit boards as little as possible.
- Remove existing static charge by touching a grounded, metallic surface.

Failure to follow these instructions can result in equipment damage.

Electromagnetic Compatibility, EMC

This product meets the EMC requirements in accordance with the standard IEC 61800-3, provided that the EMC measures described in this manual are complied with during installation. If not, signal interference can cause unexpected responses of device.

⚠WARNING

SIGNAL AND DEVICE INTERFERENCE

- Install the wiring in accordance with the EMC requirements.
- Verify compliance with the EMC requirements.

Failure to follow these instructions can result in death, serious injury, or equipment damage.

These devices are not intended to be used on a low-voltage public network which supplies power to domestic premises. Radio frequency interference is expected if used in such a network. If used in a residential or domestic premise, additional shielding and filters may be required, as determined by the systems integrator.

⚠WARNING

HIGH-FREQUENCY INTERFERENCE

Do not use these products in domestic electrical networks.

Failure to follow these instructions can result in death, serious injury, or equipment damage.

EMC measures	Effect
Keep cables as short as possible. Do not install unnecessary cable loops, use short cables from the star point in the control cabinet to the external ground connection.	Reduces capacitive and inductive interference.
Ground the product via the motor flange or with a ground strap to the ground connection at the cover of the connector housing.	Reduces emissions, increases immunity.
Ground shields of digital signal wires at both ends by connecting them to a large surface or via conductive connector housings.	Reduces interference affecting the signal wires, reduces emissions
Connect large surface areas of cable shields, use cable clamps and ground straps	Reduces emissions.

The following cables must be shielded:

- Supply voltage **VDC**
- Multifunction interface
- Service interface

Mechanical Installation

Shock or strong pressure applied to the motor shaft may damage the motor.

⚠ CAUTION

MOTOR DAMAGE AND LOSS OF CONTROL

- Protect the motor shaft during handling and transportation.
- Avoid shocks to the motor shaft during mounting.
- Do not press parts onto the shaft. Mount parts to the shaft by gluing, clamping, shrink-fitting or screwing.

Failure to follow these instructions can result in injury or equipment damage.

If an external brake is installed, applying a holding brake while the motor is running will cause excessive wear and loss of braking force. Heat will also decrease the braking force.

⚠ CAUTION

LOSS OF BRAKING FORCE DUE TO WEAR OR HIGH TEMPERATURE

- Do not use the brake as a service brake.
- “EMERGENCY STOPS” may also cause wear.
- At operating temperatures of more than 80°C (176°F), do not exceed a maximum of 50% of the specified holding torque when using the brake.

Failure to follow these instructions can result in injury or equipment damage.

If power outage and interruptions cause the power stage to be switched off, the motor is no longer stopped by braking force and may increase its speed until it reaches a mechanical stop.

⚠ CAUTION

MOTOR WITHOUT BRAKING EFFECT

Determine the mechanical situation. If necessary, use a cushioned mechanical stop or a suitable brake.

Failure to follow these instructions can result in injury or equipment damage.

When the brake of stepping motor drives is released and external forces are applied (vertical axes), the load may fall if the friction is low.

⚠ CAUTION

LOAD FALLS DURING SWITCHING ON

In such applications, limit the load to a maximum of 25% of the static holding torque.

Failure to follow these instructions can result in injury or equipment damage.

Heat Dissipation

If there is an incorrect arrangement of multiple motors or an improper setup, the motor may become very hot. The surface temperature of the motor must not exceed 100 °C (212 °F) on the surface of the motor laminations during continuous operation.

- Verify the maximum temperature is not exceeded.
- Verify there is sufficient heat dissipation by means of good ventilation or heat dissipation via the motor flange and mounting surface.

⚠ CAUTION

HOT SURFACES

- Avoid unprotected contact with hot surfaces.
- Do not allow flammable or heat-sensitive parts in the immediate vicinity of hot surfaces.
- Verify that the heat dissipation is sufficient by performing a test run under maximum load conditions.

Failure to follow these instructions can result in injury or equipment damage.

Mounting

The motor is designed to be mounted using four screws. The motor flange must be mounted on a flat surface to avoid mechanical tension from being transmitted to the housing. Painted surfaces have an insulating effect. During mounting, verify that the motor flange is mounted in such a way as to allow for good conductivity (electrical and thermal).

Mounting screw size: M3x0.5 screw, Length dependent on mounting plate thickness. Do not exceed the maximum available depth of 0.15 in (3.81mm).

NOTE: Exceeding this depth will strip the threads or loosen the motor assembly screws, damaging the motor.

Tightening torque: Tightening torque not to exceed 7.8 lb-in (9 kg-cm)

Mounting Clearance

Leave sufficient clearance around the motor body for air flow as stepper motors can become very hot. A minimum clearance of 0.5” (12.5 mm) around the sides of the motor body is required for adequate heat dissipation.

All LMD connections are located on the rear face of the device. Refer to the cable manufacturer specifications to determine adequate bend radii.

Ambient Conditions

Observe the permissible ambient conditions as listed in “Environmental Conditions” on page 20..

Electrical Installation

Interruptions of the negative connection of the controller supply voltage can cause excessively high voltages at the signal connections.

⚠ CAUTION

LOSS OF CONTROL

- Do not interrupt the negative connection between the power supply unit and load.
- Verify correct connection before applying power to the equipment.
- Do not connect, disconnect, or modify wiring while the supply voltage is present.

Failure to follow these instructions can result in injury or equipment damage.

Refer to "Engineering" on page 36 for additional information on design considerations before starting the installation.

LMD Connectors Overview

This section provides an overview of the LMD connectors. Refer to "Electrical Data" on page 28 for the electrical specifications for these connectors.

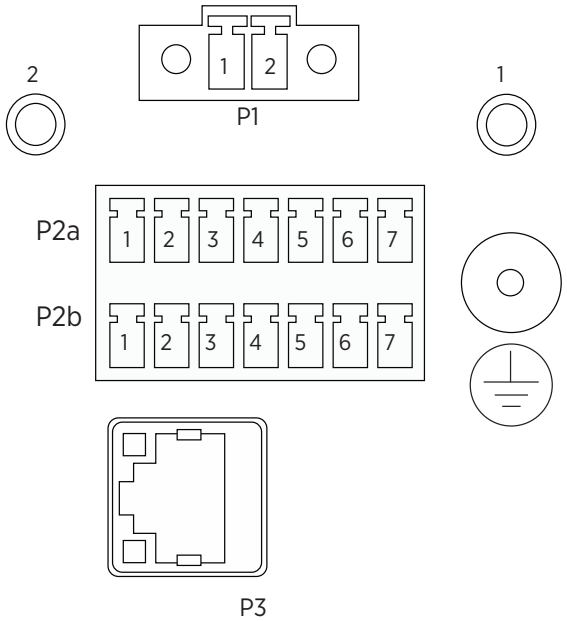

Connector	Assignment
P1	Supply voltage VDC
P2	Multifunction interface
P3	Communication interface

Supply Voltage VDC Connection

P1 Connector - Power Supply Interface Connection

Regeneration conditions resulting from braking or external driving forces may increase the VDC supply voltage to an unexpected level. Components not rated for this voltage may be damaged or cause unintended operation.

⚠ CAUTION

INOPERABLE EQUIPMENT DUE TO REGENERATION CONDITION

- Verify that all VDC components are rated for the voltage occurring during regeneration conditions (i.e., proximity sensors, photo sensors, etc.).
- Use only power supply units that will not be damaged by regeneration conditions.

Failure to follow these instructions can result in injury or equipment damage.

The connection for the DC supply voltage at the product does not have an inrush current limitation. If the voltage is switched on by means of switching the DC or hot plugging of contacts, damage to the contacts or contact welding may result.

⚠ CAUTION

DAMAGE TO CONTACTS

- Use a power supply unit that limits the peak value of the output current to a value permissible for the contact.
- Apply power to the drive by means of controlling the primary side of the power supply instead of the secondary side of the power supply.

Failure to follow these instructions can result in injury or equipment damage.

Pin Assignment

The graphic and table below show the DC power connection assignment.

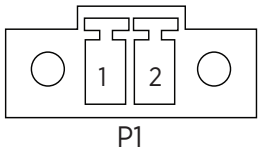

Signal	Function	Pin number
+12 to +48 VDC	Supply voltage	1
0 VDC	Reference potential to **VDC**	2

Wiring/Cable Specifications

Use shielded twisted pair cabling for supply voltage **VDC** connection.

- Verify that wiring, cables, and connected interfaces meet the protected extra-low voltage (PELV) requirements.
- Ensure the wiring conforms to the specified technical data.
- Conform to the information provided in the section, “External Power Supply Units” on page 37 and “Ground (Earth) Design” on page 41
- Install fuses for the power supply cable accordance with the electrical requirements of the equipment (note the inrush currents).

System EMI performance may be impacted by the wire size, length, and current. For wire size requirements, refer to the Wire Size table on page 39

Connecting the Supply Voltage Cable

The connector mate is a screw lock type connector. The wire gauge is determined by the length of the conductor and the amount of current required.

To interface:

- Strip 0.25” (6.35 mm) insulation.
- Insert into designated pin
- Tighten screw to 1.9 to 2.2 lbs (0.22 to 0.25 Nm).
- Insert into P1 socket and tighten lock screws

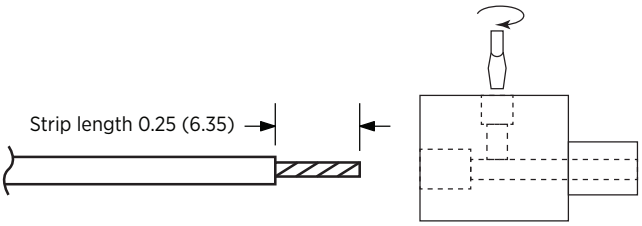

Connector (side view)

Multifunction Interface Connection

NOTE: On LMD products with a multi-turn Absolute Encoder, the Analog input located at P2a, pin 6 and 7 are replaced by the External Battery pack inputs: See Appendix D on page 78 for details specific to the Absolute Encoder variant.

P2 Connector - Multifunction Interface Pin Assignments

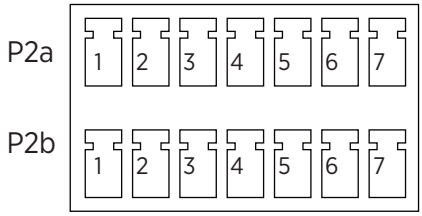

Pin	Signal	Function	I/O
1a	**INPUT_REFERENCE**	Biases the input as sinking or sourcing	—
2a	**N/C**	Not connected	—
3a	**IN2**	General purpose programmable input 2.	I
4a	**IN3**	General purpose programmable input 3.	I
5a	**IN4**	General purpose programmable input 4.	I
6a	**ANALOG_IN**	Analog input	I
7a	**LOGIC_GND**	Logic ground (non-isolated)	—

Pin	Signal	Function	I/O
1b	**AUX_PWR**	12 ... 24V auxiliary power input maintains logic circuitry and position information in the event of supply voltage VDC power loss.	—
2b	**N/C**	Not connected	—
3b	**N/C**	Not connected	—
4b	**N/C**	Not connected	—
5b	**N/C**	Not connected	—
6b	**SIGNAL_OUTPUT_COLLECTOR**	High speed signal output collector	O
7b	**SIGNAL_OUTPUT_EMITTER**	High speed trip output emitter	O

Wiring/Cable Specifications

- Shielded cable
- Twisted-pair cables
- Grounding of the shield at both ends, only if on the equipotential ground plane.

Max cable length [1]	feet (m)	328 (100)
Minimum conductor cross section	AWG (mm^2)	24 (0.205)
Maximum conductor cross section	AWG (mm^2)	20 (0.518)

1 The length depends on the conductor cross section and the driver circuit used

- Use equipotential bonding conductors.
- Verify that wiring, cables, and connected interfaces meet the PELV requirements.

Connecting the Cable

The connector mate is a clamp type terminal strip.

To interface:

- Strip 0.25” (6.0 mm) insulation.
- Use a small screwdriver to push in the designated pin’s spring clamp.
- Insert stripped wire into designated pin.
- Once all wires are Inserted, plug connector into P2 socket

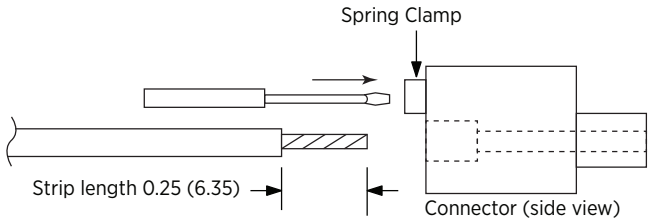

Signal Input Circuits

The signal inputs may be interfaced as sinking or sourcing as determined by the bias of the **INPUT _ REFERENCE**. Connecting the **INPUT _ REFERENCE** to a 5 ... 24V power source will provide sinking inputs. Connecting it to ground will provide sourcing inputs.

The **ACTIVE HI/LO** state of the inputs are configured using the appropriate Input Setup (**IS**) command, detailed in the MCode Programming and Reference Manual.

The inputs are optically isolated.

Line driven input (sinking):

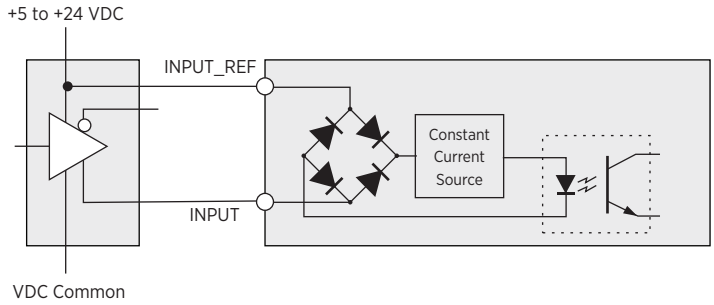

Line driven input (sourcing):

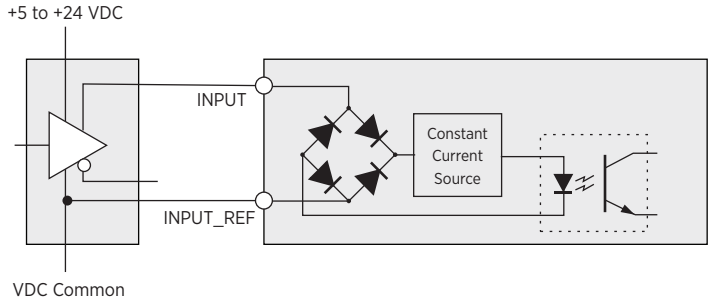

Open collector (sinking):

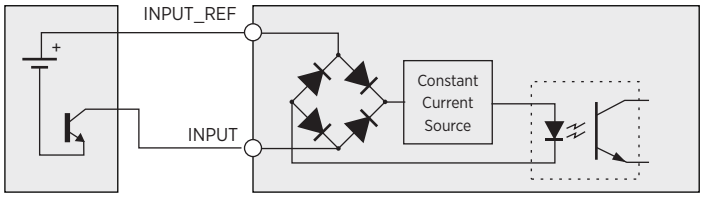

Open collector (sourcing):

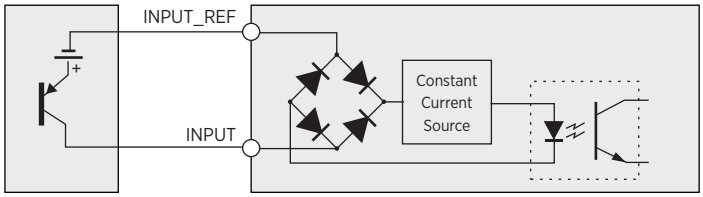

Signal Input Wiring and Usage Examples

Mechanical Switches

Sinking Operation: In the schematic below, the inputs will float at a 24V level (HIGH), then go to ground (LOW) when the switch is closed.

Sourcing Operation: The configuration shown below can be switched to a sourcing configuration by reversing the bias on the Input Reference, with the power supply return connected to the reference. The inputs will then go to ground (LOW), and at 24V (HIGH) when the switch is closed.

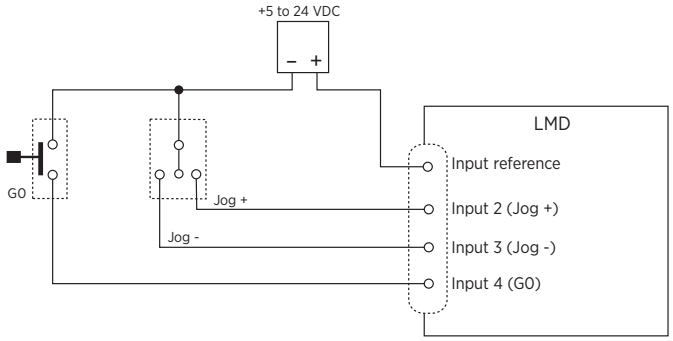

Refer to the LMD MCode or the appropriate fieldbus manual for full setup and configuration details for the inputs.

Input #	Function	Switch State	MCode Setup String (Is=[in #],[func],[active])	Notes
2	JOG +	normally open	IS=2, 7, 0	Set IN 2 as + JOG, active when low (switch closed)
3	JOG -	normally open	IS=3, 8, 0	Set IN 3 as – JOG, active when low (switch closed)
4	G0	normally closed	IS=4, 4, 1	Set IN 4 as G0, active when high (switch open)

NPN Sensors in a Sinking Home/Limit ± Configuration

A common configuration is to have two sensors which define the PLUS and MINUS limits of travel, and a third to home the axis. The following illustrates three NPN sensors connected to the LMD inputs 2 - 4 in that configuration.

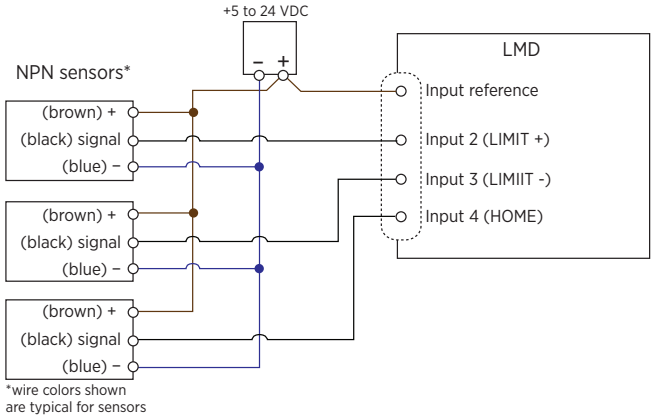

Refer to the LMD MCode manual or the appropriate fieldbus manual for full setup and configuration details for the inputs.

Input #	Function	Switch State	MCode setup string (Is=[in #],[func],[active])	Notes
2	Limit +	normally open	IS=2, 2, 0	Set IN 2 as LIMIT +, active when low (switch closed)
3	Limit –	normally open	IS=3, 3, 0	Set IN 3 as Limit –, active when low (switch closed)
4	HOME	normally closed	IS=4, 1, 1	Set IN 4 as HOME, active when high (switch open)

PNP Sensors in a Sourcing General Purpose Configuration

The following graphic illustrates three (3) PNP sensors connected to the LMD inputs 2 - 4. These inputs are configured as general purpose and may be used in an MCode program to perform branch or call subroutine operations.

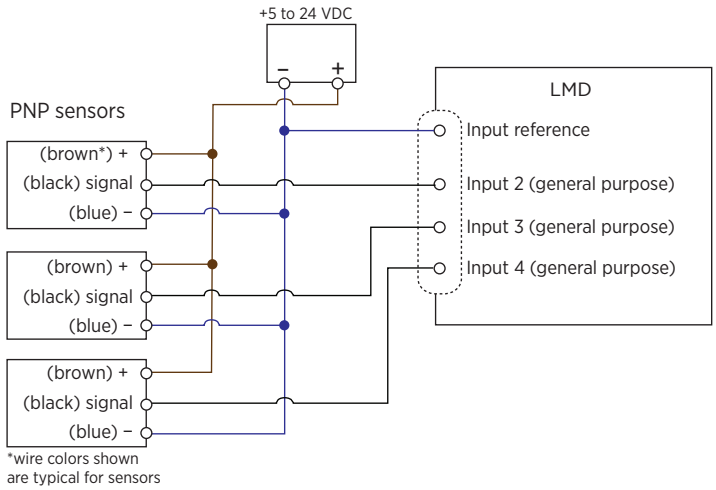

Refer to the LMD MCode manual or the appropriate fieldbus manual for full setup and configuration details for the inputs.

Input #	Function	Switch State	MCode setup string (Is=[in #],[func],[active])	Notes
2	GP	normally open	IS=2, 0, 1	Set IN 2 as LIMIT +, active when low (switch closed)
3	GP	normally open	IS=3, 0, 1	Set IN 3 as Limit –, active when low (switch closed)
4	GP	normally open	IS=4, 0, 1	Set IN 4 as HOME, active when high (switch open)

Signal Output Circuit

The signal output provides indication of trip condition(s). A condition or multiple conditions which will trigger this output are programmable.

The output is galvanically isolated by means of optic isolation.

Signal Output:

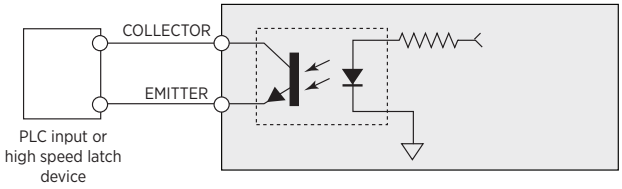

Analog Input

The **ANALOG _ IN** may be configured to sense one of four (4) input types:

- 0 - 5V
- 0 - 10V
- 0 - 20 mA
- 4 - 20 mA

ANALOG _ IN Signal Input

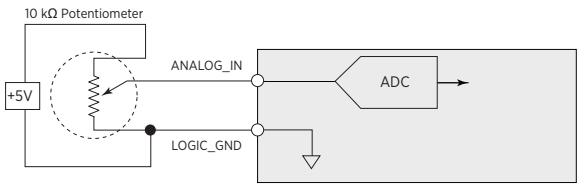

Analog Input Wiring and Usage Examples

The analog input may be used in either voltage or current loop modes with two range settings available for each mode:

- Voltage: 0 to 5V or 0 to 10 V
- Current: 0 to 20 mA or 4 to 20 mA

A typical use for the analog input would be to read the value from a sensor within an MCode program and set a position or velocity based upon that value.

NOTE: The Logic (Analog) ground pin is non-isolated (common with power ground.)

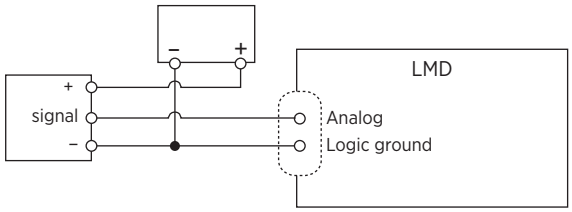

Loop	Range	MCode setup string (Is=5,[mode],[range])	Notes
Voltage	0 to 5V	IS=5, 9, 0	Set input to voltage mode, 0 to 5 volt range
	0 to 10V	IS=5, 9, 1	Set input to voltage mode, 0 to 10 volt range
Current	0 to 20 mA	IS=5, 10, 0	Set input to current mode, 0 to 20 mA range
	4 to 20 mA	IS=5, 10, 1	Set input to current mode, 4 to 20 mA range

Communication Interface Connection

P3 Connector - Ethernet Interface

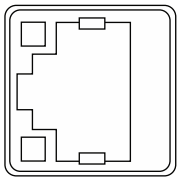

P3

Function

The drive system is commissioned via the Ethernet interface , which is part of the LSS (available for download from https://novantaims.com/dloads/) or by using supported commissioning software.

Connector Style

RJ45

Checking Wiring

Check the following before applying power to the drive:

- Are all cables and connectors properly installed?
- Are there any live, exposed cables?
- Are the signal wires properly installed?

Chapter 5:
Configuration

What's in this Chapter?

This chapter includes the following topics:

Topic	Page
Preparing for Configuration	60
Installing the LSS	60

Drives may perform unintended movements because of incorrect wiring, incorrect settings, incorrect data, or other errors.

Interference (EMC) may cause unpredictable responses in the system. Further, the behavior of the drive system is governed by stored data or settings. Unsuitable settings or data may trigger unintended movements or responses to signals and disable monitoring functions.

⚠WARNING

UNINTENDED MOVEMENT

- Carefully install the wiring in accordance with the EMC requirements.
- Do NOT operate the drive system with unknown settings or data.
- Verify that the stored data and settings are correct.
- Carefully run configuration tests for all operating states and potential error situations.
- Verify the functions after replacing the product and also after making changes to the settings or data.
- Only start the system if there are no persons or obstructions in the zone of operation.

Failure to follow these instructions can result in death, serious injury, or equipment damage.

Rotating parts may cause injuries and may catch clothing or hair. Loose parts or parts that are unbalanced may be ejected.

⚠WARNING

ROTATING PARTS

- Verify correct mounting and installation of all rotating parts.
- Use a cover to help protect against rotating parts.

Failure to follow these instructions can result in death, serious injury, or equipment damage.

If power outage and errors cause the power stage to be de-energized, the motor may increase its speed until it reaches a mechanical stop.

⚠WARNING

MOTOR WITHOUT BRAKING EFFECT

- Verify the mechanical situation.
- If necessary, use a cushioned mechanical stop or a suitable brake.

Failure to follow these instructions can result in death, serious injury, or equipment damage.

The motor may move as a result of the reaction torque; it may tip and fall.

⚠WARNING

FALLING PARTS

Mount the motor securely so it will not break loose during strong acceleration.

Failure to follow these instructions can result in death, serious injury, or equipment damage.

Metal surfaces of the product may exceed 70°C (158°F) during operation.

⚠WARNING

HOT SURFACES

- Avoid unprotected contact with hot surfaces.
- Do not allow flammable or heat-sensitive parts in the immediate vicinity of hot surfaces.
- Verify that the heat dissipation is sufficient by performing a test run under maximum load conditions.
- Check the temperature during test runs.

Failure to follow these instructions can result in death, serious injury, or equipment damage.

Preparing for Configuration

The following tests are required before configuration:

- The device may be commissioned in system or out of system.
- Only supply voltage **VDC** and the Ethernet interface connections are required for Configuration.
- Ensure that this chapter is read in it's entirety, as many setup parameters are mode-specific.

For configuration and programming, a computer with the LSS is required.

NOTE: Detailed usage instructions and screen captures of the LSS are found in the LSS manual, which is available for download from:

https://novantaims.com/dloads/

For devices that have CyberSecurity enabled, initial configuration of the device will require additional setup. Refer to the following website for supporting information and access to Setup Notes:

https://novantaims.com/all-products/cybersecurity/

Installing the LSS

NOTE: The Ethernet Interface of the LSS is used for performing firmware upgrades.

- Computer running Windows 7 or greater.
- Internet connection.
- Reference the LSS product manual for installation and configuration information.

Chapter 6:
Operations

What's in this Chapter?

Optional brief summary of the chapter.

This chapter includes the following topics:

Topic	Page
Basics	62
Software Operation Modes	64
Operation by hMT Modes	66
I/O Operation	67

Basics

Mode of Operation

Basic operational functionality of the LMD TCP/IP product is impacted by the selected mode of operation. The device can act as an Adapter Class device on an Ethernet/IP network, as a programmable node on a MODBUS/TCP network, as an IO-device on a Profinet IO network, or it can operate independently as a programmable motion controller on a TCP/IP network if in MCode/TCP mode.

MODBUS/TCP

Using MODBUS/TCP, the LMD Ethernet is controlled by a PLC on a MODBUS/TCP network. Stored MCode programs may be executed, paused, or stopped in this mode.

For MCode/TCP mode, motion and I/O functionality is dictated by the device's programming and/or configuration in either of the following modes:

- **Immediate (streaming command) mode:** The device will respond to motion, position and I/O commands in real-time. These commands are given via an HMI or host computer over the TCP/IP network.
- **Program mode:** The device will move the motor, control outputs, and respond to inputs as dictated by the programming. Programs may be executed via the immediate mode execution command or I/O interactions.

Immediate and program modes may be used interchangeably. Programs may be halted to issue immediate commands and then resumed.

Ethernet/IP

The LMD Ethernet operates as an adapter class device capable of both implicit and explicit messaging. All of the LMD operations are controlled via the PAC or PLC. Stored MCode programs may be executed, paused or stopped in this mode when certain requirements are met. For additional information refer to:
https://novantaims.com/application-note/executing-mcode-program-ethernetip/

Profinet IO

The LMD Profinet operates as an IO-DEVICE on a Profinet network. 38 output registers and 34 input registers may be variably mapped to standard motion, I/O, control and status commands. It is not possible to store MCode programs on drives in Profinet mode.

Hybrid Motion Technology

NOTE: hMTechnology is only available on LMD models with an encoder.

Hybrid Motion Technology is the core control technology that enables the multi-mode functionality of the LMD by overcoming many of the limitations inherent in stepper systems. Two major limitations addressed by this technology are:

- Loss of motor synchronization and subsequent stalling.
- Excessive motor heated due to limited current control options

Loss of Synchronization

Synchronous motion in a stepper motor requires that the lead/lag relationship between the rotor and stator be within +/- 2 motor full steps. As this relationship drifts toward the 2 step point the torque available to the load is reduced, with maximum constant torque available at the <= 1 full step point.

Conditions that can cause the stepper motor to lose synchronization and stall are:

Rotor lags stator:

- Acceleration is too rapid to apply enough torque to overcome the inertia of the load.
- Transient load condition at velocity (i.e., load being increased on a conveyor).

Rotor leads stator:

- Deceleration is too rapid to hold the load within the +/- 2 full step range.
- Overhauling load condition where the momentum of the load is greater than the torque supplied to maintain constant velocity.

The following graphic shows control bounds for hMT.

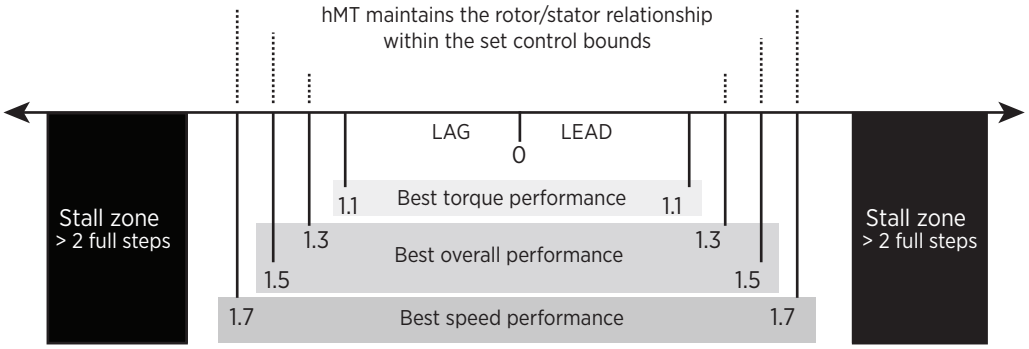

Hybrid Motion Technology uses a high speed feedback loop to tightly maintain the rotor - stator relationship within a specified range, or control bounds.

Refer to the Ethernet Fieldbus Manual for additional information, available for download from: https://novantaims.com/dloads/

Variable Current Control

Stepper motor drivers operate at two adjustable current levels:

1. Running current, the current level in use when the shaft is moving.
2. Holding or reduction current, the current level in use when the shaft is at rest.

Variable current control uses hMT to accurately measure and track the rotor/stator relationship and apply current as needed. An example of this can be seen when current is applied during acceleration or deceleration. The current is reduced to the level required to move the load when the axis is at velocity. This can lead to greater power efficiency and reduced motor operating temperatures.

Position Make-up

When active, the position make-up function stores the difference between commanded pulses and actual motor steps in a register. At the completion of the move the lead or lag pulses will be reinserted into the profile and moved to the commanded position at one of two velocity presets.

Overview of Motor Phase Current

NOTE: LMD models without an encoder will operate in fixed run/hold current only.

The motor phase current of the drive is influenced by the following factors:

- The setting of the run current.
- The setting of the holding current.
- The setting of the holding current delay.
- The setting of the motor settling delay.
- Current control defined as fixed or variable.

Refer to the following graphic for an overview of motor phase current.

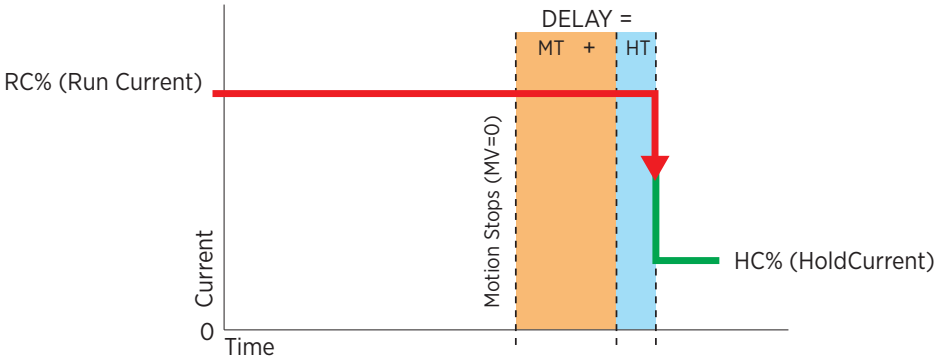

Software Operation Modes

The LMD is controlled and programmed using the MCode language which consists of 1 and 2 character mnemonics.

Details are available in the MCode Programming and Reference manual available for download from:

https://novantaims.com/dloads/

Immediate Mode (Streaming Command) - All Protocols

In Immediate Mode, the device will respond to streaming commands entered via the service interface. If used solely in this mode, the device will operate as a slave in a master-slave relationship with a communication host in a centralized control system.

In this mode, the device will respond to motion commands and queries for register data, read the state of inputs, or set the state of outputs based upon instructions from the system master.

The network architecture shown below is an example of immediate mode operation. All system control is dictated by the programming of the host.

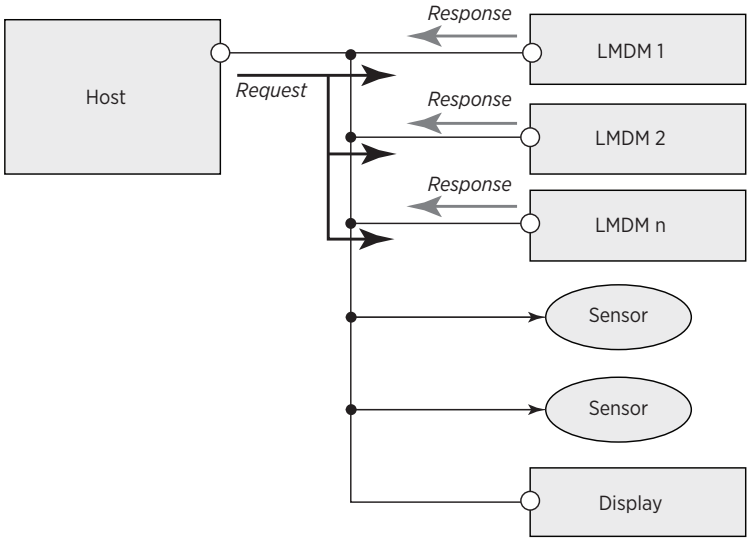

Program Mode - MCode/TCP, MODBUS/TCP, or Ethernet/IP

In Program Mode, the device may operate as a standalone controller. The LMD will respond programmatically to inputs, set outputs based on flag states or register values, and send register values over the network as instructed by the programming of the device.

This mode functionality allows the device to be used to initiate and respond to process events in a distributed intelligence system.

The network architecture shown below is an example of program mode operation. All system control is dictated by the programming of the individual LMDs, which can perform system process actions based up I/O events. The host is in place for monitoring the system.

NOTE: Specific requirements must be met to use Program Mode for the Ethernet/IP protocol. Refer to the following Application Note for additional information:
https://novantaims.com/application-note/executing-mcode-program-ethernetip/

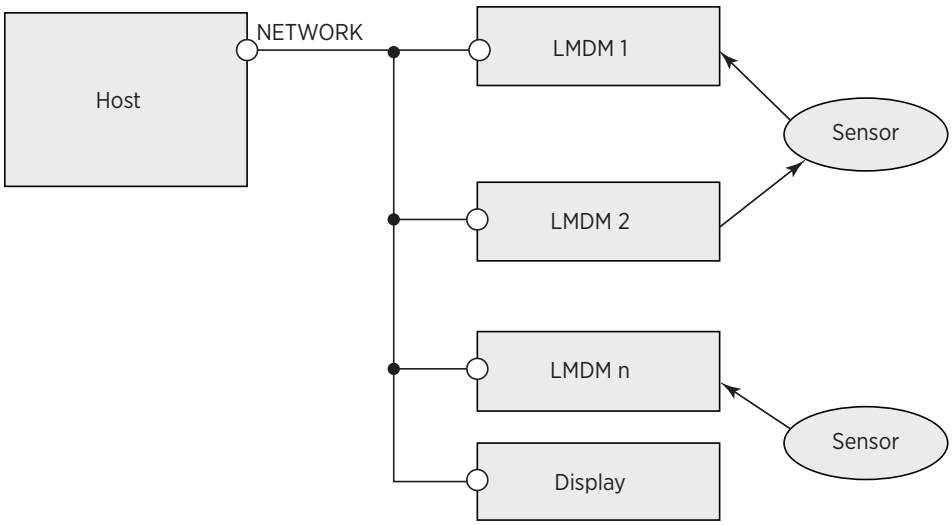

MODBUS/TCP Protocol Exceptions

In MODBUS/TCP, the program is executed via a function code. Status and position information may be stored in preset registers which may be polled by the MODBUS PLC or Controller.

Operation by hMT Modes

The LMDCE and LMDAE feature four operational modes for hMT:

1. hMT Off
2. hMT On (fixed current)
3. hMT On (variable current)
4. Torque control

The selected mode will have a major effect on how the device will operate during a move.

The hMT operating mode may also be changed either programmatically or immediately provided a move is not in progress.

hMT Off

With hMT disabled, the motion block of the device will operate as a standard open loop stepper controller/drive/motor.

Commands for absolute or relative positioning, or slew at velocity are received via the Ethernet bus and processed as commanded, bypassing the hMT logic block.

The following graphic shows a block diagram for a system with hMT disabled.

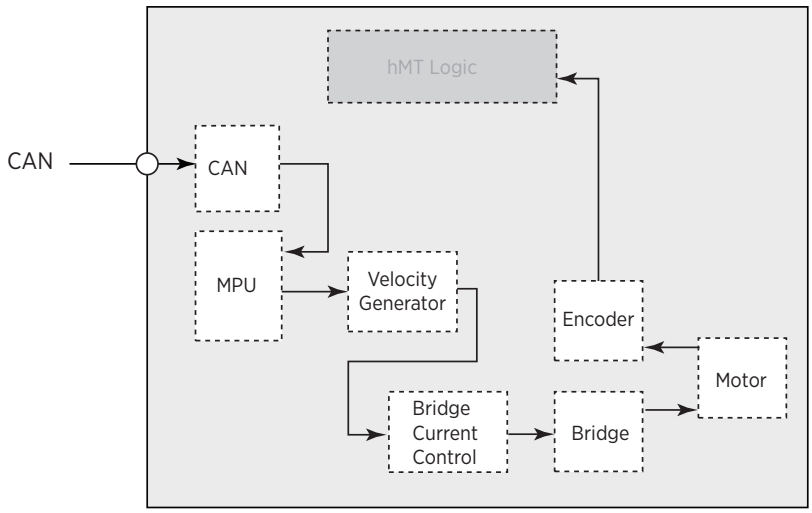

In bypass mode, the current control will be fixed at the set run and hold current percent levels.

Encoder functions such as stall detection and position maintenance are available in bypass mode, provided that the LMD model is equipped with an encoder.

hMT On (Fixed Current)

With hMT enabled in fixed current mode, hMT will use the integrated encoder to maintain the rotor/stator relationship within the set control bounds.

Commands for absolute or relative positioning, or slew at velocity are received via the Ethernet bus and processed through the hMT logic block. Feedback from the encoder is compared with commanded clock pulses from the velocity generator. The output of this comparison is used to keep the rotor-stator relationship within the control bounds, thus eliminating loss of synchronization.

The variance between commanded position and actual position is stored in the lead/lag register and is used to perform a position correction move if make-up is enabled.

The device will use the run and hold current settings for bridge current.

The following graphic shows a block diagram for a system with hMT enabled.

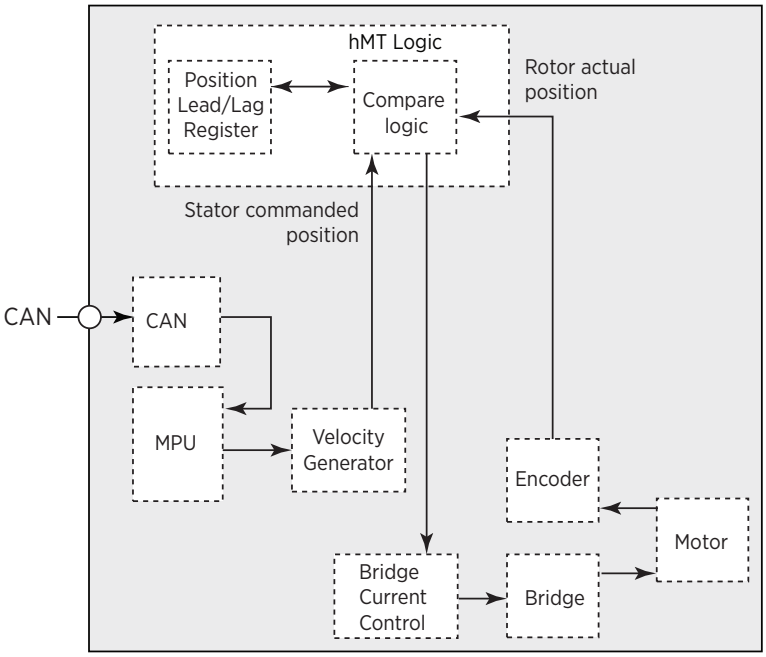

hMT On (Variable Current)

With hMT enabled in variable current mode, the hMT will function as described for fixed current mode with the difference that current control will be in variable mode.

In variable current mode, hMT will adjust the bridge current to the amount required to move the load. The set run current will be used as the maximum threshold.

With hMT in variable current mode the device will use less power and run cooler, depending on load and duty cycle.

hMT On (Torque Mode)

With hMT in torque mode, the hMT will maintain constant torque on the load at the speed required to maintain that torque.

The amount of torque used is set using the torque percent parameter. The maximum speed for torque mode is set using the torque speed parameter. When Profile Torque Mode is activated, the LMD will automatically go into torque mode.

I/O Operation

The LMD TCP/IP products feature the following I/O points:

- Three (3) general purpose inputs
- One (1) 12-bit analog input (not available on the Absolute Encoder version)
- One (1) high-speed signal output

All of the I/O points are functionally configured in software using MCode. For detailed descriptions of each I/O configuration parameter, refer to the MCode Programming and Reference Manual, available for download from:
https://novantaims.com/dloads/

General Purpose Inputs

The general purpose inputs are +5 to +24 VDC tolerant optically isolated inputs with programmable functions and dedicated alternate functions.

The function and active logic state is defined using the **INPUT _ SETUP** parameter (**IS**) as:
IS=[POINT],[FUNCTION],[ACTIVE]

Point	Function	Active
2, 3, 4	0 = General Purpose 1 = Home 2 = Limit + 3 = Limit – 4 = G0 5 = Soft stop 6 = Pause program 7 = Jog + 8 = Jog – 11 = Reset 13 = Step (IN3)/Direction (IN4) 14 = ENC A (IN3)/ENC B (IN4) 15 = StepUp (IN3)/StepDown (IN4)	0 = Low True 1 = High True

The logic state of each input is read using the **I2**, **I3**, and **I4** flags. The inputs may be read as a 4-bit word using the **IT** variable.

Analog Input

NOTE: The absolute encoder variant does not have an analog input.

The analog input is a 12-bit input which operates in one of two modes.

- Voltage mode can be set to be 0 to 5 V or 0 to 10 V.
- Current mode will operate at either the 4 to 20 mA or the 0 to 20 mA level.

Function is defined using the **INPUT _ SETUP** parameter (**IS**) as:
IS=[5],[FUNCTION],[PARAMETER]

Point	Function	Parameter
5	9 = Voltage mode*	0 = 0 – 5 V* 1 = 0 – 10 V
	10 = Current mode	0 = 0 – 20 mA* 1 = 4 – 20 mA

* Default

The value of the analog input is read using the **I5** command which will read in counts.

Signal (Trip) Output

The signal output is an isolated high speed dedicated function output for monitoring trip events. The output may be programmed to trigger on a single trip event or any combination of events. The available events are:

- Trip on input
- Trip on absolute position
- Trip on capture
- Trip on time
- Trip on relative position
- Trip on hMT status
- Trip on main power loss

The trip output may also be set to any other output function.

NOTE: While the output is high speed, it is lower current and can only sink 5.5 mA, where outputs 1 and 2 are 100 mA and over-current protected. Outputs 1 and 2 are not available on the NEMA 17 (42 mm) device.

The function and active logic state is defined using the command or function appropriate to the protocol being used.

Point	Function	Alternate Function	Active
3	28 = Trip	16 = General Purpose 17 = Moving 18 = Software error 20 = Velocity changing 21 = Locked rotor 23 = Changing position 24 = hMT active 25 = Make-up active	0 = Low True 1 = High True

The logic state of the trip output may be set by a programmed trip event or using the **O3** command.

Appendix A:
Diagnostics and Troubleshooting

Opening LMD heat sinks can affect factory-set encoder alignment and impact hMTechnology performance. Tamper seals are in place to ensure factory hardware settings remain unaltered and match the encoder alignment set during the manufacturing process. The LMD product warranty may be void If a seal is broken.

If experiencing erratic operation, contact an IMS Applications Engineer for support.

Operation State and Error Indication

Temperature Monitoring

Sensors in the drive measure the temperature of the power stage.

If the maximum temperature is exceeded, the power stage switches off. Indication can be read by:

- Setting the **ATTENTION _ OUT** to activate on over-temperature.
- Reading the error code **(71)** using a terminal emulator or the LMD configuration utility

Stall Detection (hMT Disabled)

Detecting a stall condition may be accomplished by monitoring the encoder index outputs via the multifunction interface.

A stall condition only exists when hMT is disabled **(AS=0)**. hMT will prevent loss of synchronization and subsequent stalls from occurring.

Locked Rotor (hMT Enabled)

A locked rotor indication identifies the condition where the rotor-stator relationship exceeded lead/lag limits **(LD/LG)** and/or locked rotor timeout **(LT)** as specified during parameterization. When this condition occurs the power stage will disable and a locked rotor error will be asserted.

A locked rotor condition can only exist when hMT is enabled **(AS=1/ AS=2)**

This status may be read using:

- Setting the **ATTENTION _ OUT** to activate on locked rotor.
- The status LED on the rear of the device
- The hMT status bits
- The error code **(104)** (**NOTE**:If AS=3, the rotor does not stop if an error 104 occurs.)

LED Indicators

The LMD TCP/IP products has two dual-color (red/green) LEDs visible from the back of the drive to give status and error indication of the Ethernet/IP connection.

When power is first applied to the motor, both LEDs should flash orange, lasting for approximately one (1) second. The LED's should remain off until the motor receives a valid connection.

NOTE:
- If proper power and ethernet connections have been established on the device, the LED's may be off if no activity is present on the RJ45 connection.
- Synchronously flashing Red MS & NS LEDs indicate a CyberSecurity enabled unit that has not been initially setup. Refer to the following website for additional information: https://novantaims.com/all-products/cybersecurity/

Ethernet/IP (ODVA)

Color	State	Description
NS – Network Status (LED 2)		
None	Off	No power, no Ethernet connection
Red	Solid	Unrecoverable error detected
	Flashing	Recoverable error detected or I/O connection timed out
Green	Solid	Normal runtime operation (I/O connection allocated)
	Flashing	Device is idle or not allocated to a client (PLC)
Red/Green	Alternating/Bi-color	Power-up self test in progress
MS – Module Status (LED 1)		
None	Off	No power
Red	Solid	Unrecoverable error detected/Drive initialization error (MCode in upgrade mode)
	Flashing	Minor, recoverable interruption
Green	Solid	Normal drive operation
Red/Green	Alternating/Bi-color	Power-up self test in progress

Profinet-IO

Color	State	Description
NS – Network Status (LED 2)		
None	Off	No power
Red	Solid	Motion Controller driver initialized and operational
	Flashing	Motion drive error detected or drive is in MCode firmware upgrade mode
Green	Solid	Unrecoverable error detected - drive not responding
	Flashing	Minor, recoverable error detected
MS – Module Status (LED 1)		
None	Off	No power
Red	Solid	Profinet stack error detected
	Flashing	Profinet connection interrupted or disconnected
Green	Solid	Valid Profinet connection exists
	Flashing	Device does not have a valid Profinet connection

MCode/TCP

Color	State	Description
NS – Network Status (LED 2)		
None	Off	No power or no Ethernet port 503 connection
Red	Flashing	Power applied and Port 503 (MCode/TCP) connected
Green	Solid	Unrecoverable error detected
Red/Green	Alternating/Bi-color	Socket error or port 503 (MCode/TCP) disconnected
MS – Module Status (LED 1)		
Green	Flashing	With Port 503 is connected - Ethernet/IP application is active With Port 503 is disconnected - Profinet application is active

MODBUS/TCP

Color	State	Description
NS – Network Status (LED 2)		
No defined functions		
MS – Module Status (LED 1)		
None	Off	No power or no MODBUS/TCP port 502 connection
Red	Flashing	Port 502 (MODBUS/TCP) connected
Green	Solid	Unrecoverable error detected
Red/Green	Alternating/Bi-color	Socket error or port 502 (MODBUS/TCP) disconnected

Error Codes

Error codes may be read by querying the device via a terminal emulator using the command:

PR ER

The response will display the last error code received on the device. For a listing of error codes refer to the LMD MCode Manual.

Appendix B:
Accessories and Spare Parts

Accessories

Source Commissioning Software

The latest version of the Ethernet Interface Utility, part of the LSS, is available for download from: https://novantaims.com/dloads/user-interface-software/

Mating Connectors

Description	Part number
Replacement connector kit	CK-15

The replacement connector kit (CK-15) contains the following replacement connectors for P1 and P2.

- P1: 2-pin power connector
- P2a: 7-pin I/O top connector (orange)
- P2b: 7-pin I/O bottom connector (blue)

Appendix C:
Service, Maintenance, and Disposal

The designer of any control scheme must consider the potential failure modes of control paths and, for certain critical functions, provide a means to achieve a safe state during and after a path failure. Examples of critical control functions are EMERGENCY STOP, overtravel stop, power outage, and restart.

⚠WARNING

LOSS OF CONTROL

- Separate or redundant control paths must be provided for critical functions.
- System control paths may include communication links. Consideration must be given to the implication of unanticipated transmission delays or failures of the link.
- Observe all accident prevention regulations and local safety guidelines 1.
- Each implementation of the product must be individually and thoroughly tested for proper operation before being placed into service.

Failure to follow these instructions can result in death, serious injury, or equipment damage.

1 For USA: Additional information, refer to NEMA ICS 1.1 (latest edition), "Safety Guidelines for the Application, Installation, and Maintenance of Solid State Control" and to NEMA ICS 7.1 (latest edition), "Safety Standards for Construction and Guide for Selection, Installation and Operation of Adjustable-Speed Drive Systems".

Always hold the plug housing to remove the connector, not the wiring.

- Supply voltage VDC: Remove the cabling by pulling the plug housing.
- Miscellaneous: Press in the locking levers on both sides of the connector while pulling the plug housing to remove each of the Multifunction Interface connections.
- Communication: Press in the locking tab on the connector head while pulling the plug housing to remove the Ethernet Communication connection.

Opening the LMD heat sinks can affect factory-set encoder alignment and impact hMT. Tamper seals ensure factory hardware settings remain unaltered and match the encoder alignment set during the manufacturing process. If a tamper seal is broken, the LMD product warranty is void.

⚠WARNING

UNINTENDED EQUIPMENT OPERATION

- Do not open the LMD housing for any reason.
- Contact an IMD Applications Engineer if the product exhibits incorrect operation.

Failure to follow these instructions can result in death, serious injury, or equipment damage.

NOTE: The product may only be repaired by a certified customer service center. No warranty or liability is accepted for repairs made by unauthorized persons.

Service Address

If an error cannot be resolved from the information provided in this manual, contact an IMS Applications Engineer. Have the following details available:

- Nameplate (type, identification number, serial number, DOM, ...)
- Type of error (e.g., LED flash code, error number, etc.)
- Previous and current circumstances
- Assumptions concerning the cause of the error

Also include this information if returning the product for inspection or repair.

NOTE: Units being returned for inspection or repair must be accompanied by a Return Material Authorization (RMA).

Contact Technical or applications support:

Phone: 860-295-6102

Email: etech@imshome.com

Maintenance

Check the product for dirt, dust, or damage at regular intervals, depending on the way it's used.

Replacing Units

Drives may perform unintended movements because of incorrect wiring, incorrect settings, incorrect data, or other errors.

Interference (EMC) may cause unpredictable responses in the system. The behavior of the drive system is governed by numerous stored data or settings. Unsuitable settings or data may trigger unintended movements or responses to signals and disable monitoring functions.

⚠WARNING

UNINTENDED MOVEMENT

- Carefully install the wiring in accordance with the EMC requirements.
- Do NOT operate the drive system with unknown settings or data.
- Verify that the stored data and settings are correct.
- Carefully run configuration tests for all operating states and potential error situations.
- Verify the functions after replacing the product and also after making changes to the settings or data.

Failure to follow these instructions can result in death, serious injury, or equipment damage.

Only start the system if there are no persons or obstructions in the zone of operation.

- Switch off all supply voltages. Verify that no voltages are present.
- Label all connections and uninstall the product.
- Note the identification number and the serial number shown on the product nameplate for later identification.
- Install the new product as per Section Chapter 4, "Installation" on page 43 .
- Commission the product as per Section Chapter 5, "Configuration" on page 58.

Shipping, Storage, and Disposal

Removal Procedure:

- Switch off all power supplies, verifying that all voltage sources have been turned off.
- Disconnect all power supplies.
- Pull out all plugs.
- Remove the product from the system.

Shipping

The product must be protected against shocks during transportation. If possible, use the original packaging for shipping.

Storage

The product may only be stored in spaces where the specified permissible ambient conditions for room temperature and humidity are met. Protect the product from dust and dirt.

Disposal

The product consists of various materials that can be recycled and must be disposed of separately. Dispose of the product in accordance with local regulations.

Appendix D:
LMD with Absolute Encoder

Overview

This appendix covers the multi-turn absolute encoder functions for LMD Ethernet TCP/IP products. The multi-turn absolute encoder holds and updates the position information regardless of the powered on/off state of the LMD device.

The absolute position in memory is powered by an internal source for up to 30 days, or by an external battery pack to extend the life to five (5) years.

Unboxing Procedure

When unboxing the product, the internal storage should be considered to be in a discharged state.

1. Connect DC power in accordance with “Electrical Installation” on page 48.
2. Allow the unit to charge for a period of 24 hours. During this time, programming and commissioning the unit may be performed.
3. The internal storage level my be queried via the communications or network interface.
4. If an application requires position retention of the LMD in an unpowered state for greater than 30 days, an external Back-up Battery Pack (ICP0531) is required. This accessory will extend the data retention and update time up to five (5) years for up to six (6) LMD absolute encoder products.

Connection of the Multifunction Interface

Absolute Encoder Version Variance from Standard LMD Products

The pin configuration differs on LMD absolute encoder units as the analog input is replaced with the input for the Encoder Back-up Battery Pack (ICP0531).

- P2a Pin 6: VBAT+
- P2a Pin 7: VBAT-

These pins are used to connect the optional ICP0531 Encoder Backup Battery Pack.

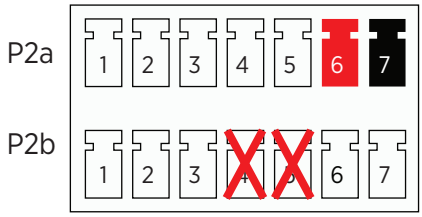

ICP0531 Encoder Back-up Battery Pack

The optional Encoder Back-up Battery Pack (ICP0531) will provide back-up power for the LMD Absolute Encoder circuitry, retaining and updating the position data for a period of up to five (5) years. The battery pack requires three (3) Energizer L91 1.5V AA Lithium batteries.

Dimensional Information

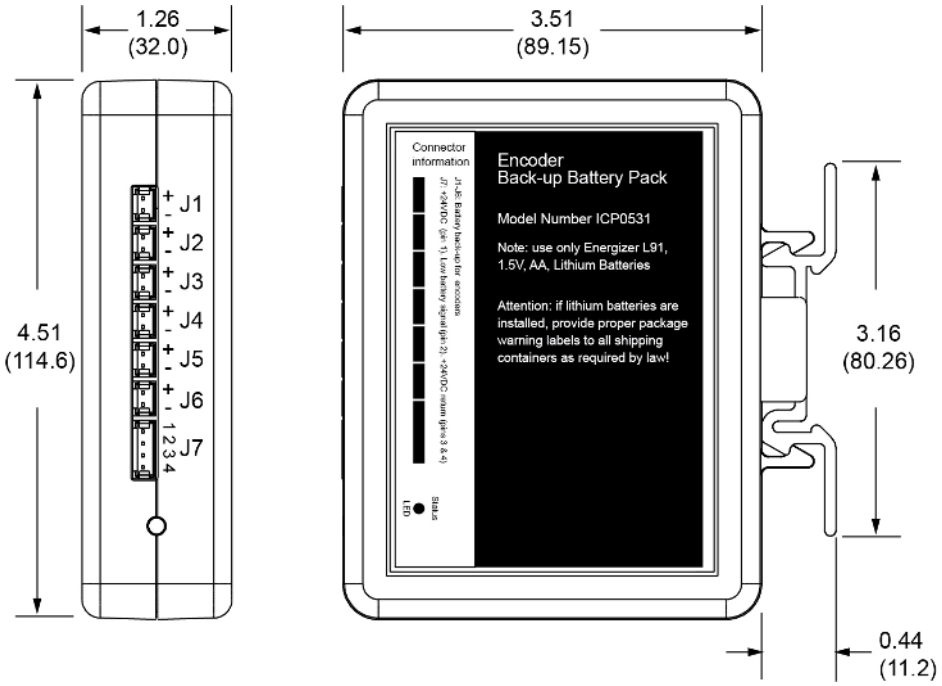

Battery Voltage Level Monitoring

The ICP0531 features a monitoring circuit which indicates a low-level state by the following two (2) methods:

1. Blinking LED on the battery pack.
2. Low-Level warning output located at J7:2 (requires an external 24 VDC signal).

Installing/Replacing the Batteries

NOTE: Use only Energizer L91 1.5V AA Lithium batteries.

⚠ CAUTION

FLAMMABILITY HAZARD

Do not load or transport lithium ion batteries if the packaging is damaged. Handle damaged batteries with care.

Failure to follow these instructions can result in injury or equipment damage.

Attention: if Lithium batteries are installed, provide proper package warning labels to all shipping containers as required by law.

1. Open the battery pack by removing the four (4) screws on the back side of the case.

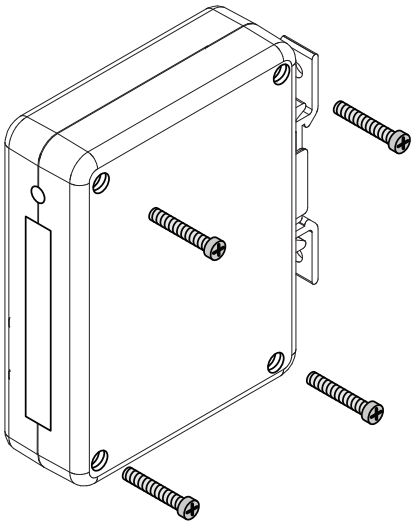

2. Install the batteries taking care to match the imprints on the battery holder.

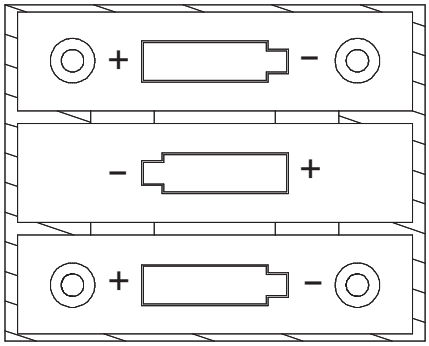

NOTICE

EQUIPMENT DAMAGE

Observe proper polarity during battery installation.

Failure to follow these instructions can result in equipment damage.

Connector Configuration

NOTE: The following cables are sold separately.

J1-J8: Encoder Backup Voltage

To connect encoder battery backup power to a single Absolute MDrive product, use development cable PD02-0531-FL1 (shown below)

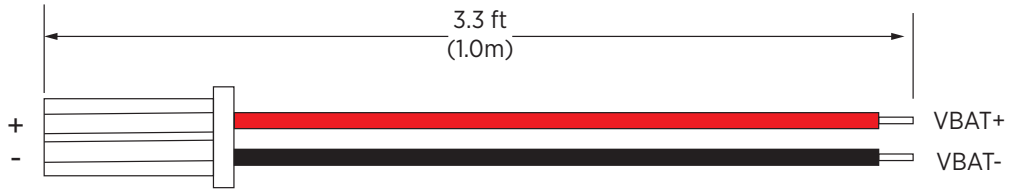

MFG	Housing P/N	Crimp Pin P/N	Crimp Pin Qty
AMP	280358-0	182206-2	2 ea

Pin#	Signal	Description	Wire color
1(+)	V BAT +	Battery positive supply to one (1) LMD Absolute encoder product	Red
2(–)	V BAT –	Battery negative (return)	Black

J7 Supply and Monitoring

To connect the 24 VDC system supply and optional low-level advisory output, use development cable PD04-0531-FL1 (shown below).

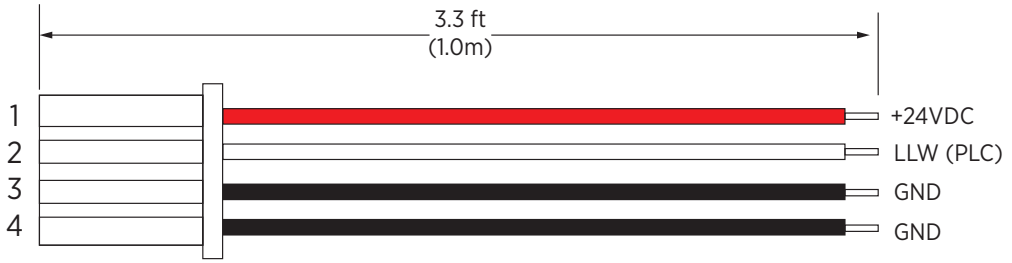

MFG	Housing P/N	Crimp Pin P/N	Crimp Pin Qty
AMP	280359-0	182206-2	4 ea

Pin#	Signal	Description	Wire Color
1	+VDC	+24 VDC Supply Voltage	Red
2	Low Level	Low Level Voltage Advisory Output	White
3	GND	+24 VDC return	Black
4	GND	+24 VDC return	Black

Connecting the Encoder Battery Pack

The following diagram shows the connection of the optional Encoder Back-up Battery Pack (ICP0531).

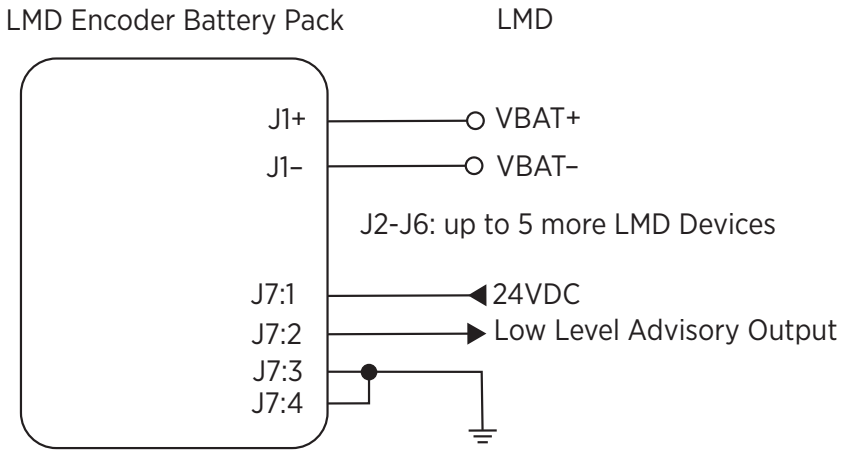

GLOSSARY

A

AC: Alternating current

Acceleration: The time rate of change of velocity with respect to a fixed reference frame. The commanded step rate is started at a base velocity and accelerated at a slew velocity at a defined and controlled rate or rate of changes.

ASCII: American Standard Code for Information Interchange. Standard for coding of characters.

C

Closed Loop System: In motion control, this term describes a system wherein a velocity or position (or both) sensor is used to generate signals for comparison to desired parameters. For cases where loads are not predictable, the closed loop feedback from an external encoder to the controller may be used for stall detection, position maintenance, or position verification.

D

Daisy Chain: This term is used to describe the linking of several devices in sequence, such that a single signal stream flows through one device and on to another.

DC: Direct current

Deadband: A range of input signals for which there is no system response.

Default Value: Factory setting.

Detent Torque: The periodic torque ripple resulting from the tendency of the magnetic rotor and stator poles to align themselves to positions of minimal reluctance. The measurement is taken with all phases de-energized.

Direction of Rotation: Rotation of the motor shaft in a clockwise or counterclockwise direction of rotation. Clockwise rotation is when the motor shaft rotates clockwise while looking at the end of the protruding motor shaft.

DOM: The Date of manufacturing on the nameplate of the device is shown in the format DD.MM.YY,
e.g., 31.12.19 (December 31, 2019).

Duty Cycle: For a repetitive cycle, the ratio of on time to total cycle time.

E

EMC: Electromagnetic compatibility

Encoder: Sensor for detection of the angular position of a rotating component. The motor encoder shows the angular position of the rotor.

Error: Operating state of the drive caused as a result of a discrepancy between a detected (computed, measured, or signaled) value or condition and the specified or theoretically correct value or condition.

Error Class: Classification of errors into groups. The different error classes allow for specific responses to conditions (e.g., by severity).

G

Ground (Earth) Loop: A ground (earth) loop is any part of the DC return path (ground) that has more than one possible path between any two points.

H

Half Step: This term means that the motor shaft will move a distance of 0.9 degree (400 steps per shaft revolution) instead of moving 1.8 degree per digital pulse.

Hybrid Motion Technology™ (hMT): A motor control technology which bridges the gap between stepper and servo performance.

Holding Torque: The maximum torque or force that can be externally applied to a stopped, energized motor without causing the rotor to rotate continuously. This is also called “static torque”.

I

I/O: Inputs/outputs

Index Pulse: Signal of an encoder to reference the rotor position in the motor. The encoder returns one index pulse per revolution.

Inertia: A measure of an object’s resistance to a change in velocity. The larger an object’s inertia, the greater the torque required to accelerate or decelerate it. Inertia is a function of an object’s mass and shape. For the most efficient operation, the system-coupling ratio should be selected so that the reflected inertia of the load is equal to or no greater than 10 times the rotor inertia of the stepper motor.

Inertia (Reflected): Inertia as seen by the stepper motor when driving through a speed change, reducer, or gear train.

L

Lag: The amount (in full motor steps) that the rotor lags the stator. Lag conditions are caused by loading on the motor shaft, as during transient loading or rapid acceleration.

Lead: The amount (in full motor steps) that the rotor leads the stator. Lead conditions are caused by an overhauling load, as during periods of rapid deceleration.

Limit Switch: Switch that signals overtravel of the permissible range of travel.

Load: Any external resistance (static or dynamic) to motion that is applied to the motor.

Locked Rotor: When the lag/lead limit is reached, a timer starts a countdown that is determined by the user. The locked rotor will assert itself by triggering a flag and, depending on the selected mode, by disabling the output bridge.

Loss of synchronization: In traditional stepper systems, when the lead/lag relationship of the rotor and stator reaches two full motor steps, the alignment of the magnetic fields is broken and the motor will stall in a freewheeling state.

M

Microstepping: A control electronic technique that proportions the current in a stepper motor’s windings to provide additional intermediate positions between poles. Produces smooth rotation over a wide range and high positional resolution. Typically, step resolutions range from 400 to 51,200 steps per shaft revolution.

Motor Phase Current: The available torque of a stepper motor is determined by the motor phase current. The higher the motor phase current the higher the torque.

N

NEMA: The acronym for the National Electrical Manufacturer's Association, an organization that sets standards for motors and other industrial electrical equipment.

O

Open Loop System: An open loop motion control system is where no external sensors are used to provide position or velocity feedback signals, such as encoder feedback of position.

Opto-Isolated: A method of sending a signal from one piece of equipment to another without the usual requirement of common ground potentials. The signal is transmitted optically with a light source (usually an LED) and a light sensor (usually a photo-sensitive transistor). These optical components provide electrical isolation.

P

Parameter: Device data and values that can be set by the user.

PLC: Programmable logic controller

Position Make-up: When active, the position make-up can correct for position errors occurring due to transient loads. The lost steps may be interleaved with incoming steps, or reinserted into the profile at the end of a move.

Power Stage: The power stage controls the motor. The power stage generates currents for controlling the motor on the basis of the positioning signals from the controller.

Q

Quick Stop: Function used to enable fast deceleration of the motor via a command or in the event of a malfunction.

R

Resolution: The smallest positioning increment that can be commanded.

Resonance: The frequency that a stepper motor system may begin to oscillate. Primary resonance frequency occurs at about one revolution per second. This oscillation will cause a loss of effective torque and may result in loss of synchronism. The designer should consider reducing or shifting the resonance frequency by utilizing half step or micro-step techniques or work outside the primary resonance frequency.

Rotor: The moving part of the motor, consisting of the shaft and the magnets. These magnets are similar to the field winding of a brush type DC motor.

Rotor Inertia: The rotational inertia of the rotor and shaft.

RS485: Fieldbus interface as per EIA-485 which enables serial data transmission with multiple devices.

S

Sinking Current: Refers to the current flowing into the output of the chip. This means that a device connected between the positive supply and the chip output will be switched on when the output is low.

Slew: The position of a move profile where the motor is operating at a constant velocity.

Sourcing Current: Refers to the current flowing out of the output of the chip. This means that a device connected between the chip output and the negative supply will be switched on when the output is high.

Stall: Loss of synchronization.

Stall Detection: Stall detection monitors whether the index pulse is always correctly triggered at the same angle position of the motor shaft.

Stator: The stationary part of the motor. Specifically, it is the iron core with the wire winding in it that is pressed into the shell of the frame. The winding pattern determines the voltage constant of the motor.

T

Torque Ramp: Deceleration of the motor with the maximum possible deceleration, which is only limited by the maximum permissible current. The higher the permissible braking current, the stronger the deceleration. Because energy is recovered depending on the coupled load, the voltage may increase to excessively high values. In this case the maximum permissible current must be reduced.

V

Variable Current Control: When active, variable current control will control the motor current as such to maintain the torque and speed on the load to what is required by the profile. This leads to reduced motor heating and greater system efficiency.

W

Warning: If not used within the context of safety instructions, a warning alerts to a potential problem detected by a monitoring function. A warning is not a error and does not cause a transition of the operating state. Warnings belong to error class 0.

Warranty

For the latest warranty and product information, visit:
https://novantaims.com/warranty-and-disclaimer/

Document Revision History

Liberty MDrive Ethernet TCP/IP: IMS-MN-LMDE42_A		
Date	**Revision**	**Changes**
02/2022	A	Document revision to new company name and format.

Novanta IMS is a part of the Precision Motion Group within Novanta, a leading technology company that delivers innovation to medical and advanced industrial OEMS.

As standards, specifications, and designs may change, confirmation of the information given in this publication can be found in the product disclaimer and most recent product information, available online.
https://novantaims.com/all-products/

© 2022 Novanta IMS. All rights reserved.
Photos: Novanta IMS
Print: Novanta IMS

To provide feedback on Novanta IMS documentation, send an e-mail to:
documentation@imshome.com

Novanta IMS

370 North Main Street
Marlborough, CT 06447
Phone: (860) 295-6102
www.novantaims.com