Hardware Manual

Liberty MDrive CANopen

NEMA 17 (42 mm) with Pluggable Connectors

Publication IMS-MN-LMDA42_A

02/2022

CANopen

c UL us LISTED CE RoHS REACH IP65

Novanta IMS

The information provided in this documentation contains general descriptions and/or technical characteristics of the performance of the products contained herein. This documentation is not intended as a substitute for and is not to be used for determining suitability or reliability of these products for specific user applications. It is the duty of any such user or integrator to perform the appropriate and complete risk analysis, evaluation and testing of the products with respect to the relevant specific application or use thereof.

Neither Novanta IMS nor any of its affiliates or subsidiaries shall be responsible or liable for misuse of the information contained herein. If you have any suggestions for improvements or amendments or have found errors in this publication, please notify us.

You agree not to reproduce, other than for your own personal, noncommercial use, all or part of this document on any medium whatsoever without permission of Novanta IMS, given in writing. You also agree not to establish any hypertext links to this document or its content.

Novanta IMS does not grant any right or license for the personal and noncommercial use of the document or its content, except for a non-exclusive license to consult it on an “as is” basis, at your own risk. All other rights are reserved.

All pertinent state, regional, and local safety regulations must be observed when installing and using this product. For reasons of safety and to help ensure compliance with documented system data, only the manufacturer should perform repairs to components.

When devices are used for applications with technical safety requirements, the relevant instructions must be followed. Failure to use Novanta IMS software or approved software with our hardware products may result in injury, harm, or improper operating results.

Failure to observe this information can result in injury or equipment damage.

For information on the availability of products, go to https://novantaims.com/

The information contained in the present document is subject to change without notice. The technical characteristics of the devices described in the present document also appear online. The characteristics that are presented in the present document should be the same as those characteristics that appear online. In line with our policy of constant improvement, we may revise content over time to improve clarity and accuracy. If there is a difference between the document and online information, use the online information as reference. All details provided are technical data which do not constitute warranted qualities.

Some of the product designations are registered trademarks of their respective owners, even if this is not explicitly indicated.

Table of Contents

Safety Information 5

Important Information 5
Qualification of Personnel 5
Intended Use 5
Product Related 6

About this Manual 8

Introduction 8
Terminology Derived from Standards 8
Source Documents and Software 9
Writing Conventions and Symbols 9
Documentation and Literature References 10
Website Directory 10
Documentation Feedback 10

Chapter 1: Introduction 11

About this Product 12
Unit Overview 12
Components and Interfaces 13
Conditions for UL 508C 15
Name Plate 16
Part Number Identification 17

Chapter 2: Technical Data 20

Certifications 21
Environmental Conditions 21
Mounting Data 22
Mechanical Data 25
Electrical Data 29
Rotary Motor Data 32
External Linear Actuator Data 33
Electric Cylinder Data 34

Chapter 3: Engineering 35

External Power Supply Units 36
Auxiliary Power Supply 39
Wiring and Shielding 39
Ground (Earth) Design 40
Monitoring Functions 41

Chapter 4: Installation 42

Electromagnetic Compatibility, EMC 44
Mechanical Installation 44
Supply Voltage VDC Connection 47
Multifunction Interface Connection 49
Signal Input Circuits 50
Signal Output Circuit 53
Analog Input 53
Communications Interface Connection 54
Checking Wiring 55

Chapter 5: Configuration 56

Preparing for Configuration 58
Configuration via Layer Setting Services 58

Chapter 6: Operation 59

Basics 60
CANopen DSP402 Operation Modes 62
Operation by hMT Modes 64
I/O Operation 65

Appendix A: Diagnostics and Troubleshooting 66

Operation State and Error Indication 66

Appendix B: Accessories and Spare Parts 67

Accessories 67

Appendix C: Service, Maintenance, and Disposal 68

Service Address 69
Maintenance 69
Replacing Units 69
Shipping, Storage, and Disposal 70

Appendix D: Liberty MDrive with Absolute Encoder 71

Overview 71
Unboxing Procedure 71
Connection of the Multifunction Interface 71
ICP0531 Encoder Back-up Battery Pack 72

Glossary 76

SAFETY INFORMATION

Important Information

Notice

Read these instructions carefully, and look at the equipment to become familiar with the device before trying to install, operate, service, or maintain it. The following special messages may appear throughout this documentation or on the equipment to warn of potential hazards or to call attention to information that clarifies or simplifies a procedure.

The addition of this symbol to a “Danger” or “Warning” safety label or message indicates that an electrical hazard exists which will result in personal injury if the instructions are not followed.

This is the safety alert symbol. It is used to alert of potential personal injury hazards. Obey all safety messages and labels that follow this symbol to avoid possible injury or death.

⚠ DANGER
DANGER indicates a hazardous situation which, if not avoided, **will result** in death or serious injury.

⚠WARNING
WARNING indicates a hazardous situation which, if not avoided, **could result** in death or serious injury.

⚠ CAUTION
CAUTION indicates a hazardous situation which, if not avoided, **could result** in minor or moderate injury.

NOTICE
NOTICE is used to address practices not related to physical injury.

Qualification of Personnel

Electrical equipment should be installed, operated, serviced, and maintained only by qualified personnel. No responsibility is assumed by Novanta IMS for any consequences arising out of the use of this material.

A qualified person is one who has skills and knowledge related to the construction and operation of electro-mechanical equipment and its installation, and has received safety training to recognize and avoid the hazards involved.

Intended Use

The product may only be used in compliance with all applicable safety regulations and directives, the specified requirements, and the technical data.

Prior to using the product, perform a risk assessment in view of the planned application. Based on the results, the appropriate safety measures must be implemented.

Since the product is used as a component in an entire system, ensure the safety of persons by means of the design of this entire system (e.g., machine design).

Operate the product only with the specified cables and accessories. Use only genuine accessories and spare parts.

⚠ DANGER

POTENTIAL FOR EXPLOSION

Install and use this equipment in non-hazardous locations only.

Failure to follow these instructions will result in death or serious injury.

Any use other than the use explicitly permitted is prohibited and can result in hazards. Electrical equipment should be installed, operated, serviced, and maintained only by qualified personnel.

Product Related

⚠ DANGER

HAZARD OF ELECTRICAL SHOCK, EXPLOSION, OR ARC FLASH

Remove all power from all devices before connecting or disconnecting inputs or outputs to any terminal or installing or removing any hardware.

Failure to follow these instructions will result in death or serious injury.

When the system is started, the drives are usually out of the operator's view and cannot be visually monitored.

⚠ DANGER

EQUIPMENT OPERATION

Only start the system if there are no persons in the zone of operation.

Failure to follow these instructions will result in death or serious injury.

Drives may perform unintended movements because of incorrect wiring, incorrect parameter settings, incorrect data, user programming bugs, or other errors. Further, interference (e.g., electromagnetic interference (EMI)) may cause unpredictable responses in the system.

⚠ WARNING

UNINTENDED MOVEMENT

- Carefully install the wiring in accordance with the electromagnetic compatibility (EMC) requirements.
- Do not operate the drive system with unknown parameter settings or data.

Failure to follow these instructions can result in death, serious injury, or equipment damage.

The designer of any control scheme must consider the potential failure modes of control paths and, for certain critical functions, provide a means to achieve a safe state during and after a path failure. Examples of critical control functions are emergency stop, overtravel stop, power outage, and restart.

⚠ WARNING

LOSS OF CONTROL

- The designer of any control scheme must consider the potential failure modes of control paths and, for certain critical control functions, provide a means to achieve a safe state during, and after a path failure. Examples of critical control functions are emergency stop and overtravel stop.
- Separate or redundant control paths must be provided for critical control functions.
- System control paths may include communication links. Consideration must be given to the implications of anticipated transmission delays or failures of the link.
- Each implementation of the product must be individually and thoroughly tested for proper operation before being placed into service.

Failure to follow these instructions can result in death, serious injury, or equipment damage.

NOTE: For USA: Additional information, refer to NEMA ICS 1.1 (latest edition), "Safety Guidelines for the Application, Installation, and Maintenance of Solid State Control" and to NEMA ICS 7.1, (latest edition), "Safety Standards for Construction and Guide for Selection, Installation, and Operation of Adjustable-Speed Drive Systems"

Drives may perform unintended movements due to mechanical damage to connectors. Mechanical damage to the connectors may cause erratic or uncontrolled operation. Installation with a bent or broken mounting flange, motor shaft, or misaligned coupling may cause unintended behavior and possible destruction of system components as a result.

⚠ WARNING

LOSS OF CONTROL, ERRATIC OPERATION AND DESTRUCTION OF MECHANICS

- Do not drop product.
- Leave product in protective packaging until ready for use.
- Carefully inspect connectors prior to installation in a system for mechanical damage.
- Carefully inspect motor shaft and ensure shaft rotates freely without binding.

Failure to follow these instructions can result in death, serious injury, or equipment damage.

Opening LMD heat sinks can affect factory-set encoder alignment and impact Hybrid Motion Technology (hMT) performance. Tamper seals are used to ensure factory hardware settings remain unaltered and match the encoder alignment set during the manufacturing process.

⚠ WARNING

UNINTENDED EQUIPMENT OPERATION

- Do not open the LMD device housing for any reason.
- Contact a Novanta IMS applications representative if the product exhibits unexplained, erratic, or incorrect operation.

Failure to follow these instructions can result in death, serious injury, or equipment damage.

Radial (side) loading or axial (thrust) impacts on the shaft may result in premature bearing failure.

NOTICE

EXCESSIVE RADIAL OR AXIAL LOADS

- Do not exceed the maximum radial or side load limits on the motor shaft.
- Do not apply force that will pull the shaft from the motor as that may compress the pre-load washer, causing the rotor to move.
- Do not allow the shaft to be subject to impact forces or otherwise struck by external objects.

Failure to follow these instructions can result in equipment damage.

NOTE: For additional information, contact a Novanta IMS Applications representative.

ABOUT THIS MANUAL

Introduction

Read and understand the material contained in this manual before working on Liberty MDrive (LMD) products for the first time. Take particular note of the safety information (see “Safety Information” on page 5). Only qualified persons are allowed to work with the LMD product (see “Qualification of Personnel” on page 5).

A copy of this manual must be available for personnel who work with LMD products.

The purpose of this manual is to show the capabilities of the LMD and how to use it safely and properly. Follow the instructions within this manual to help:

- reduce risks,
- reduce repair costs and downtime of the LMD product,
- increase the service life of the LMD product, and
- increase reliability of the LMD product.

Terminology Derived from Standards

The technical terms, terminology, symbols and the corresponding descriptions in this manual, or that appear in or on the products themselves, are generally derived from the terms or definitions of international standards.

In the area of functional safety systems, drives and general automation, this may include, but is not limited to, terms such as safety, safety function, safe state, fault, fault reset, malfunction, failure, error, error message, dangerous, etc.

Among others, these standards include:

IEC/EN 61131-2:2007	Programmable controllers, Part 2: Equipment requirements and tests.
ISO 13849-1:2015	Safety of machinery: Safety-related parts of control systems. General principles for design.
EN 61496-1:2013	Safety of machinery: Electro-sensitive protective equipment. Part 1: General requirements and tests.
ISO 12100:2010	Safety of machinery: General principles for design - Risk assessment and risk reduction.
IEC/EN 60204-1:2006	Safety of machinery: Electrical equipment of machines - Part 1: General requirements.
ISO 14119:2013	Safety of machinery: Interlocking devices associated with guards - Principles for design and selection.
ISO 13850:2015	Safety of machinery: Emergency stop - Principles for design.
IEC/EN 62061:2015	Safety of machinery: Functional safety of safety-related electrical, electronic, and electronic programmable control systems.
IEC 61508-1:2010	Functional safety of electrical/electronic/programmable electronic safety-related systems: General requirements.
IEC 61508-2:2010	Functional safety of electrical/electronic/programmable electronic safety-related systems: Requirements for electrical/electronic/programmable electronic safety-related systems.
IEC 61508-3:2010	Functional safety of electrical/electronic/programmable electronic safety-related systems: Software requirements.
IEC 61784-3:2016	Digital data communication for measurement and control: Functional safety field buses.
2006/42/EC	Machinery Directive
2014/30/EU	Electromagnetic Compatibility Directive
2014/35/EU	Low Voltage Directive

In addition, terms used in the present document may tangentially be used as they are derived from other standards such as:

IEC 60034 series	Rotating electrical machines
IEC 61800 series	Adjustable speed electrical power drive systems
IEC 61158 series	Digital data communications for measurement and control – Fieldbus for use in industrial control systems

Finally, the term, “zone of operation” may be used in conjunction with the description of specific hazards, and is defined as it is for a hazard zone or danger zone in the Machinery Directive (2006/42/EC) and ISO 12100:2010.

NOTE: The aforementioned standards may or may not apply to the specific products cited in the present documentation. For more information concerning the individual standards applicable to the products described herein, see the characteristics tables for those product references.

Source Documents and Software

The latest versions of the manuals are available online from:

https://novantaims.com/dloads/product-literature/manuals-3/

Writing Conventions and Symbols

Work Steps

Work steps must be performed consecutively. Work steps will be numbered in order of expected operation.

A response to a work step may be indicated. This allows verification that the work step has been performed correctly.

Unless otherwise stated, the individual steps must be performed in the specified sequence.

Bulleted Lists

The items in bulleted lists are sorted alphanumerically or by priority. Bulleted lists are structured as follows:

- Item 1 of bulleted list
- Item 2 of bulleted list
  - Subitem for 2
  - Subitem for 2
- Item 3 of bulleted list

Parameters

Parameters are shown as follows

RC Motor Run Current

Units of Measure

Measurements are given in both imperial and metric values. Metric values are given in parenthesis unless otherwise indicated.

Examples:

1.00 in (25.4 mm)
100 oz-in (70.6 N-cm)

Documentation and Literature References

This document should be used in conjunction with the following documents:

- LMD CANopen

The latest versions of these manuals can be downloaded from:

https://novantaims.com/dloads/product-literature/manuals-3/

Website Directory

NOTE: Direct links are subject to change as website and search engine updates occur. Each of the websites below can also be accessed through menu options on the Novanta IMS Main Page: https://novantaims.com/

Downloads:
https://novantaims.com/dloads/

Resources:
https://novantaims.com/resources/

Warranty:
https://novantaims.com/warranty-and-disclaimer/

Certifications and Listing Information:
https://novantaims.com/dloads/certificationssustainability/

Contact and Support:
https://novantaims.com/contacts/

CyberSecurity Information:
https://novantaims.com/all-products/cybersecurity/

Knowledge Based Solutions:
https://novantaims.com/resources/troubleshooting/

Documentation Feedback

To provide feedback on this or any Novanta IMS documentation, submit all feedback, corrections, or concerns to the following e-mail address.

documentation@imshome.com

Please include the following information:

- Document number and revision/print date
- Detailed description of the issue or concern
- Contact information

Chapter 1:
Introduction

What's in this Chapter?

This chapter contains the following topics:

Topic	Page
About this Product	12
Unit Overview	12
Components and Interfaces	13
Conditions for UL 508C	15
Name Plate	16
Part Number Identification	17

About this Product

This manual is valid for the NEMA 17 (42mm) Liberty MDrive (LMD) CANopen product with pluggable connectors. This chapter lists the type code for this product. The type code can be used to identify whether the product is a standard product or a customized model.

Unit Overview

The “LMD MDrive CANopen” consists of a stepper motor and integrated electronics. The product integrates interfaces, drive and control electronics, and the power stage. There are three basic control variants:

- **Closed Loop with hMT**: loop is closed by a 1000-line (4000 edge) magnetic encoder. May be operated as:
  - **hMT off**: standard encoder functions for position and stall monitoring.
  - **hMT on**: enhanced closed loop functions such as anti-stall and position make-up.
- **Absolute with hMT**: closed loop with multi-turn absolute encoder, which will retain position information for a limited time upon loss/removal of power. The standard encoder and hMT features will function as on a closed loop model. See Appendix D for details.
- **Open Loop**: open loop stepper control.

Operating Modes

The “LMD MDrive CANopen” uses DS301 communication profile as the interface between device profiles and CAN bus. It was specified in 1995 under the name DS301 and defines uniform standards for common data exchange between different device types under CANopen.

The DSP402 device profile describes standardized objects for positioning, monitoring and settings of drives.

- **Profile position**: defines the positioning of the drive. Speed, position, and acceleration can be limited. Profiled moves using a trajectory generator are also possible.
- **Homing mode**: describes the various methods to find a home position, reference point, date, or zero point on start up, or via an immediate mode command.
- **Profile Velocity**: used to control velocity of the drive with no special regard of the position. It supplies limit functions and trajectory generation.
- **Profile Torque**: defines the torque control with all related parameters. (Available on closed loop models only.)
- **Cyclic Synchronous Position**: used to define position control where the device, or multiple devices, initiate and complete a point to point move at a specified time.

Components and Interfaces

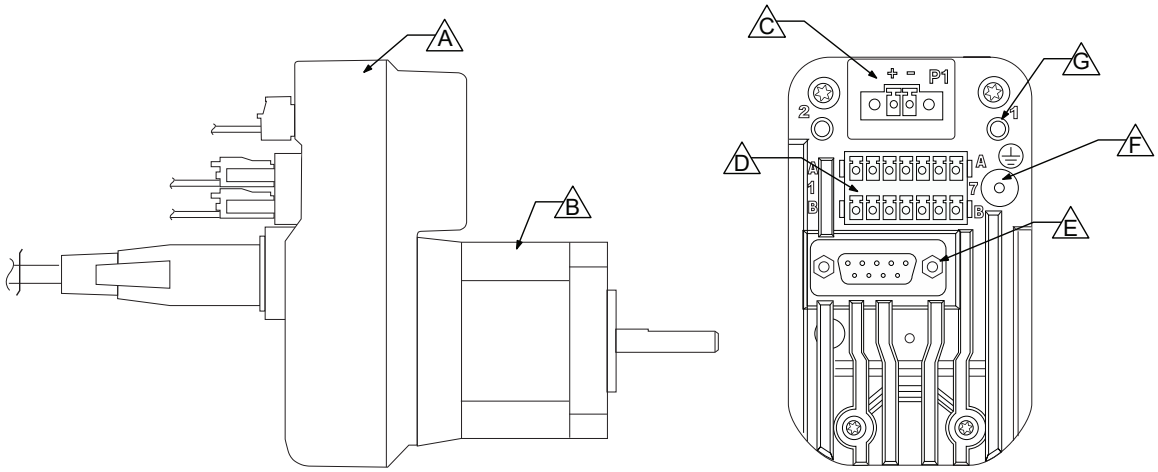

(A) Electronics housing
(B) Two-phase stepper motor
(C) DC power interface
(D) Multifunction interface
(E) CANopen interface
(F) Protective earth (PE)
(G) Light-emitting diode (LED) indicators

Components

Motor

The motor is a two-phase brushless stepper motor. The step angle of the motor is 1.8°.

Electronics Housing

The electronics system is comprised of control electronics and the power stage.

The drive system is controlled by a CANopen master sending Service Data Object (SDO) and Process Data Object (PDO) data over CAN bus 2.0b active.

Interfaces

DC Power Supply Voltage

The supply voltage **VDC** supplies the drive and control electronics and the power stage.

The ground connections of all interfaces are galvanically connected. For more information on ground connections and protection against reverse polarity, see “Ground (Earth) Design” on page 40.

Multifunction Interface

The multifunction interface operates at the following signal levels:

- +12V to +24V Aux-Power input to supply power to logic circuits in the event of main supply loss.
- +5 to +24V input signals are opto-isolated.
- 5.5 mA output signal is opto-isolated and current limited.
- 12-bit analog signal is not isolated.

The +5 to +24V input signals are programmable as general purpose or to predefined functions.

The output is a 5.5 mA signal output which can be defined as high speed trip.

The reference voltage or current is applied to the analog input and may be used for a number of programmatically defined operations.

CANopen Interface

The CANopen interface provides a connection to the CAN bus.

A computer may be connected to the interface via a Universal Serial Bus (USB) to CANopen converter or the unit may be connected to a CANopen master device such as a Programmable Logic Controller (PLC).

Commissioning is accomplished by using Layer Setting Services or by using the CANopen Configuration Utility, which is part of the LMD Software Suite (LSS), available for download at https://novantaims.com/dloads/.

The CANopen interface is also used for firmware upgrades. Upgrades require the CANopen Configuration Utility and the MD-CC501-000 or equivalent PEAK/Phytec CANopen converter.

CANopen model LMD products are identifiable by the white insert in the CANopen interface DB9 connector.

Protective Earth

PE provides a means of grounding to the device chassis.

Conditions for UL 508C

The following conditions must be met if the product is used to comply with UL 508C.

Ambient temperature during operation:

- Surrounding air temperature [°C] 0 ... +50.

Pollution degree:

- Use in an environment with pollution degree 2.

Power supply:

- Use only power supply units that are approved for over-voltage category III.
- Wiring - Use only 60/75°C copper conductors.

Safety Integrity Level (SIL)	Probability of Failure/Hour (PFH) at high or continuous demand
4	$\geq 10^{-9}$ ... $<10^{-8}$
3	$\geq 10^{-8}$ ... $<10^{-7}$
2	$\geq 10^{-7}$ ... $<10^{-6}$
1	$\geq 10^{-6}$ ... $<10^{-5}$

Hardware Fault Tolerance (HFT) and Safe Fail Fraction (SFF):

Depending on the SIL for the safety system, the IEC 61508 standard requires a specific hardware fault tolerance HFT in connection with a specific proportion of safe failures SFF (safe failure fraction). The hardware fault tolerance is the ability of a system to execute the required safety function in spite of the presence of one or more hardware faults. The SFF of a system is defined as the ratio of the rate of safe failures to the total failure rate of the system. According to IEC 61508, the maximum achievable SIL of a system is partly determined by the hardware fault tolerance HFT and the safe failure fraction SFF of the system.

SFF	HFT Type A Subsystem			HFT Type B Subsystem		
	0	1	2	0	1	2
< 60%	SIL1	SIL2	SIL3	—	SIL1	SIL2
60% ...<90%	SIL2	SIL3	SIL4	SIL1	SIL2	SIL3
90% ...<99%	SIL3	SIL4	SIL4	SIL2	SIL3	SIL4
≥99%	SIL3	SIL4	SIL4	SIL3	SIL4	SIL4

Fault Avoidance Measures

Systematic errors in the specifications, in the hardware and the software, usage faults and maintenance faults of the safety system must be avoided to the maximum degree possible. To meet these requirements, IEC 61508 specifies a number of measures for fault avoidance that must be implemented depending on the required SIL. These measures for fault avoidance must cover the entire life cycle of the safety system, i.e., from design to decommissioning of the system.

Name Plate

The name plate contains the following information:

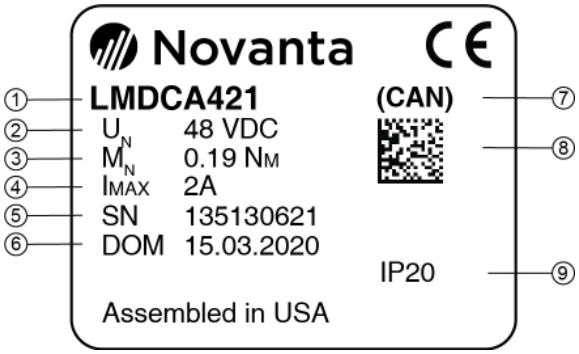

(1) Part number
(2) Nominal voltage
(3) Max. Holding torque
(4) Max required input current
(5) Serial number
(6) Date of manufacture
(7) Communication interface
(8) Data matrix
(9) Ingress protection rating

Part Number Identification

LMD Rotary Motor

The following graphic displays a breakdown of the LMD rotary motor part number identification.

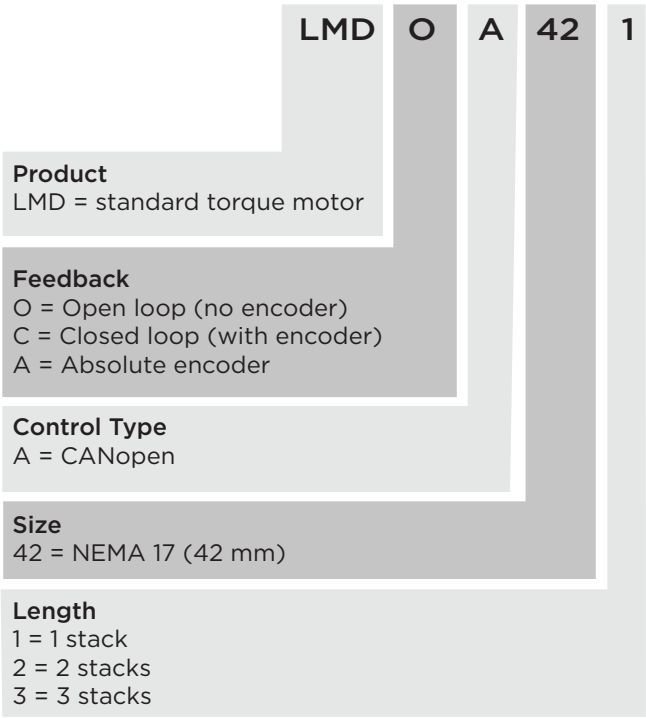

LMD External Linear Actuators

The following graphic displays a breakdown of the LMD external linear actuator part number identification.

LMD O A 42 1 P -L A 3 M 030 G T

Product
LMD = standard torque motor

Feedback
O = Open loop (no encoder)
C = Closed loop (with encoder)
A = Absolute encoder

Control Type
A = CANopen

Size
42 = NEMA 17 (42 mm)

Length
1 = 1 stack

Connector Style
P = Pluggable, IP20

Linear actuator
-L = Linear

Screw lead / pitch (travel/rev)
A = 0.250″ / 6.35mm
B = 0.125″ / 3.175mm
C = 0.063″ / 1.600mm

Shaft style
3 = External

Screw end finish
M = Metric threaded
U = UNC threaded
S = Smooth
Z = None

Screw length
available in 0.1” increments
030 = Minimum 3.0″ / 76.2mm
180 = Maximum 18.0″ / 457.2mm

Nut
G = General purpose
A = Anti-backlash

Coating
T = Teflon®
Z = None

LMD Electric Cylinders (eCylinders)

The following graphic displays a breakdown of the LMD eCylinder part number identification.

LMD O A 42 1 P -C S A 020 M NN

Product
LMD = standard torque motor

Feedback
O = Open loop (no encoder)
C = Closed loop (with encoder)
A = Absolute encoder

Control Type
A = CANopen

Size
42 = NEMA 17 (42 mm)

Length
1 = 1 stack

Connector Style
P = Pluggable, IP20

Linear actuator
-C = Electric cylinder

Nut
S = PEEK Blend

Lead / Pitch (travel/rev)
A = 0.100” / 2.54mm
B = 0.250” / 6.35mm
C = 0.500” / 12.70mm
D = 1.000” / 25.40mm

Stroke length
available in 0.1” increments
020 = Minimum 2.0″ / 50.8mm
180 = Maximum 18.0″ / 457.2mm

Mounts
M = Flange mounts
F = Foot mounts

Options
NN = Reserved

Chapter 2:
Technical Data

What's in this Chapter?

This chapter contains information on the ambient conditions and on the mechanical and electrical properties of the device family and accessories.

This chapter includes the following topics:

Topic	Page
Certifications	21
Environmental Conditions	21
Mounting Data	22
Mechanical Data	25
Electrical Data	29
Rotary Motor Data	32
External Linear Actuator Data	33
	33

Certifications

Certification	Regulation #
RoHS	2011/65/EU, 2015/863
EMC	2004/108/EC
REACH	EC 1907/2006
UL	UL 1004-1, UL 1004-3 CSA C22.2 No. 100 CSA C22.2 No. 77

A current list of certifications and compliance information can be viewed at:
https://novantaims.com/dloads/certificationssustainability/

Environmental Conditions

Ambient Operating Conditions

The maximum permissible ambient temperature during operation depends on the distance between the devices and the required power. Observe the pertinent instructions referenced in "Installation" on page 42.

The following relative humidity is permissible during operation.

Operating temperature[1]	[°C (°F)]	-20 ... 50 (-4 ... 122) (no icing)
Temperature variation	[°C (°F) min]	0.5 (32.9)
Humidity	[%]	5 ... 95 (non-condensing)

1 If the product is to be used in compliance with UL 508C, note the information provided in "Conditions for UL 508C" on page 15.

Storage and Transport

The environment during transport and storage must be dry and free from dust. The maximum vibration and shock load must be within the specified limits.

Temperature	[°C (°F)]	-25 ... 70 (-13 ... 158)
Temperature variation	[°C (°F) min]	-25 ... 30 (-13 ... 86)
Humidity	[%]	5 ... 95 (non-condensing)

Temperature Maximums

Power stage[1]	[°C (°F)]	85 (185)
Motor[2]	[°C (°F)]	100 (212)

1 May be read via parameter.
2 Measured on the surface of the motor laminations.

Installation Altitude

The installation altitude is defined as height above sea level

Installation altitude [1]	[ft (m)]	3280 (1000)

1 Installation above 3280 (1000) may require derating output current and maximum ambient temperature.

Vibration and Shock

Vibration, sinusoidal	m/s^2	10	IEC 60721-3-2
Shock, non-sinusoidal	m/s^2	100	IEC 60721-3-2

EMC

Emission	IEC61800-3 (Category C2)
Noise immunity	IEC61000-6-2

IP Degree of Protection

The product has the following degree of ingress protection (IP) as per EN 60529.

Degree of protection	IP20

The total degree of protection is determined by the component with the lowest degree of protection.

Mounting Data

Mounting Positions

NOTE: Unless otherwise stated, all drawing measurements are in inches (mm) ±0.005" (0.13mm).
Drawings are not to scale.

The following mounting positions are defined and approved as per EN 60034-7:

- IM B5 drive shaft horizontal
- IM V1 drive shaft vertical, shaft end down
- IM V3 drive shaft vertical, shaft end up

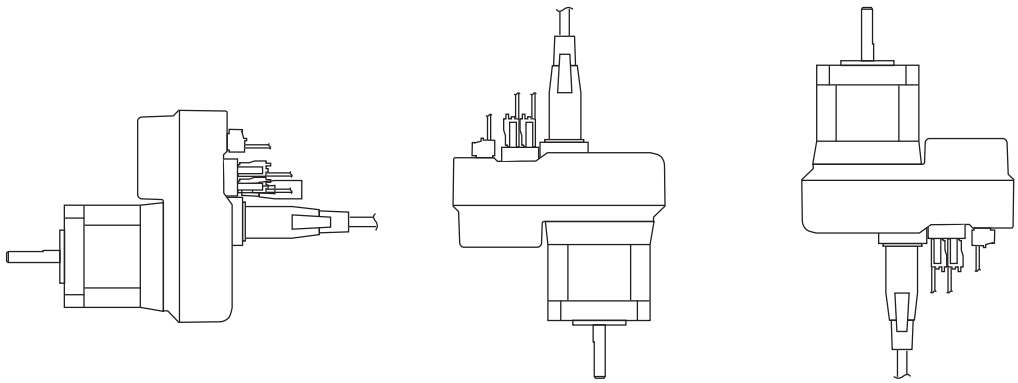

IM B5 IM V1 IM V3

Mounting (Rotary and External Linear Actuators)

Mounting the LMDXA42X uses four (4) M3 x 0.5 screws on a bolt circle diameter (BCD) of 1.725” (43.81 mm). The length of the screws will be determined by the thickness of the mounting material plus a maximum of 0.140” (3.56 mm) into the motor housing.

The maximum tightening torque of the screws is 7.8 lb-in (9 kg-cm). The following graphic shows rotary and actuator mounting hole pattern.

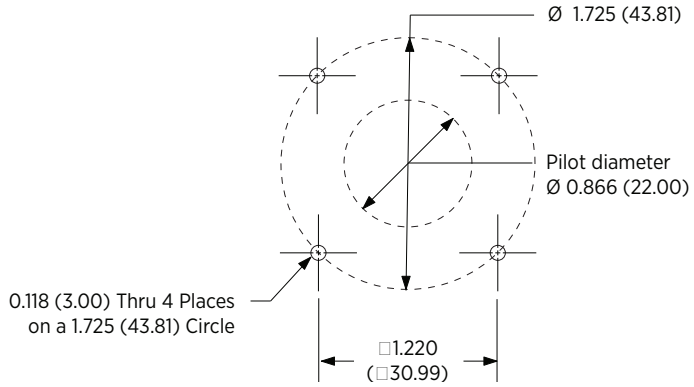

Mounting (Electric Cylinder with Flange Mount)

The electric cylinder LMD products flange mount option uses front and rear flange plates to mount the cylinder into the system. The following graphic shows the mounting hole dimensions for the flanges.

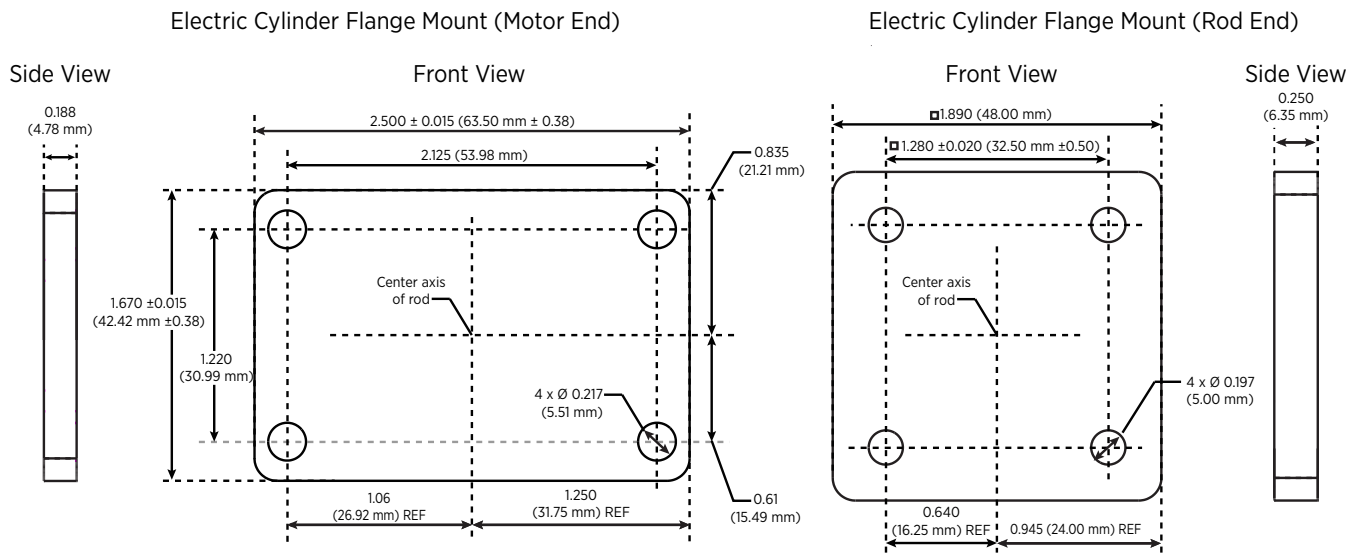

Mounting (Electric Cylinder with Foot Mount)

The electric cylinder LMD products foot mount option has front and rear foot mounting plates for mounting the cylinder into the system. The following graphic shows the mounting hole dimensions for the foot mounting plates.

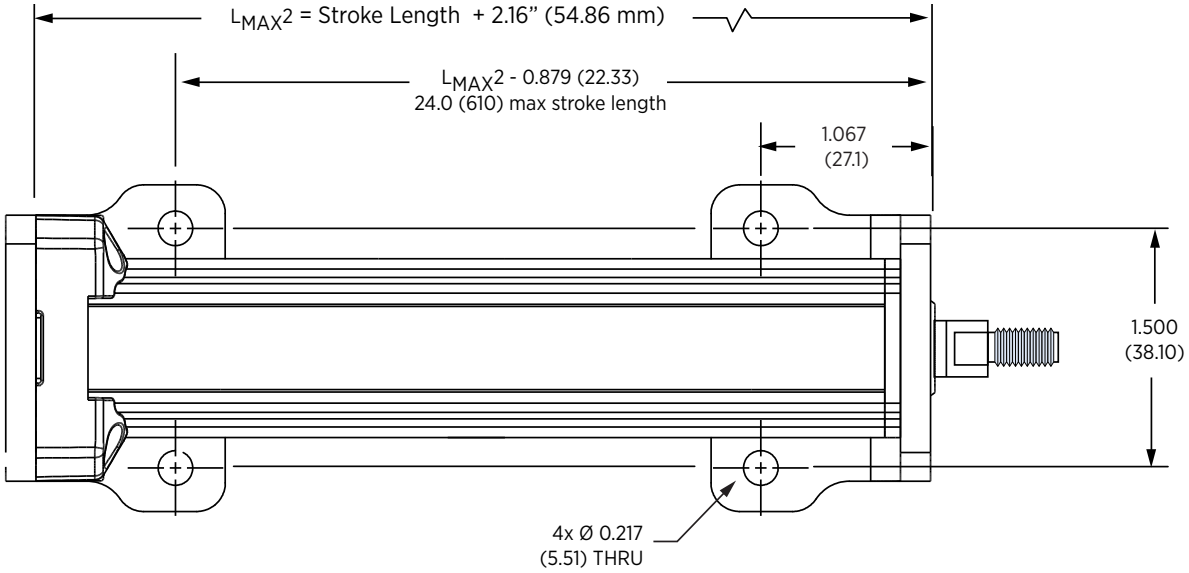

Mechanical Data

NOTICE

EXCESSIVE RADIAL OR AXIAL LOADS

Radial (side) loading or axial (thrust) impacts on the shaft may result in premature bearing wear and eventual destruction of the bearing.

- Do not place unsupported radial or side loads on the motor shaft.
- Do not allow the shaft to be subject to impact forces or otherwise struck by external objects.

Failure to follow these instructions can result in equipment damage.

Rotary Dimensions

The following graphic shows the rotary dimensions [inches (mm)].

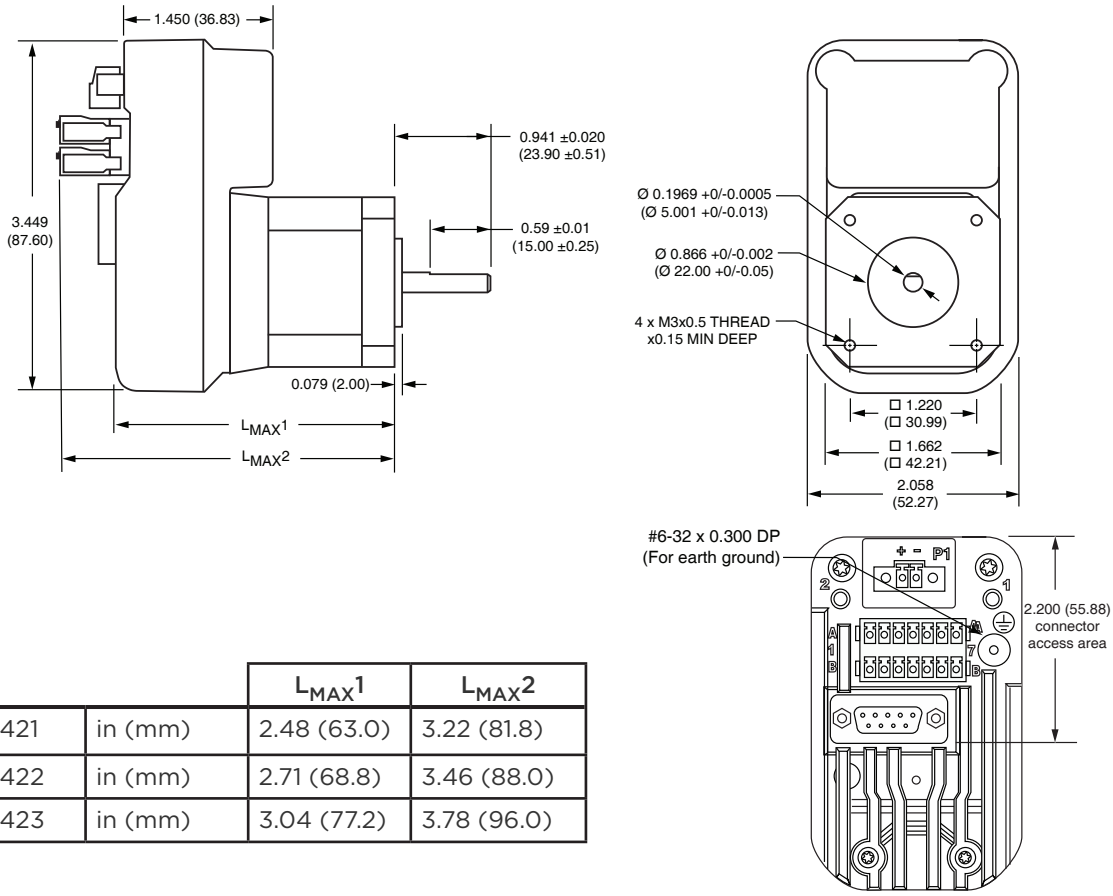

		$L_{MAX}1$	$L_{MAX}2$
LMD•421	in (mm)	2.48 (63.0)	3.22 (81.8)
LMD•422	in (mm)	2.71 (68.8)	3.46 (88.0)
LMD•423	in (mm)	3.04 (77.2)	3.78 (96.0)

External Linear Actuator Dimensions

The following graphic shows the external linear actuator dimensions of the NEMA 17 (42 mm) [inches (mm)].

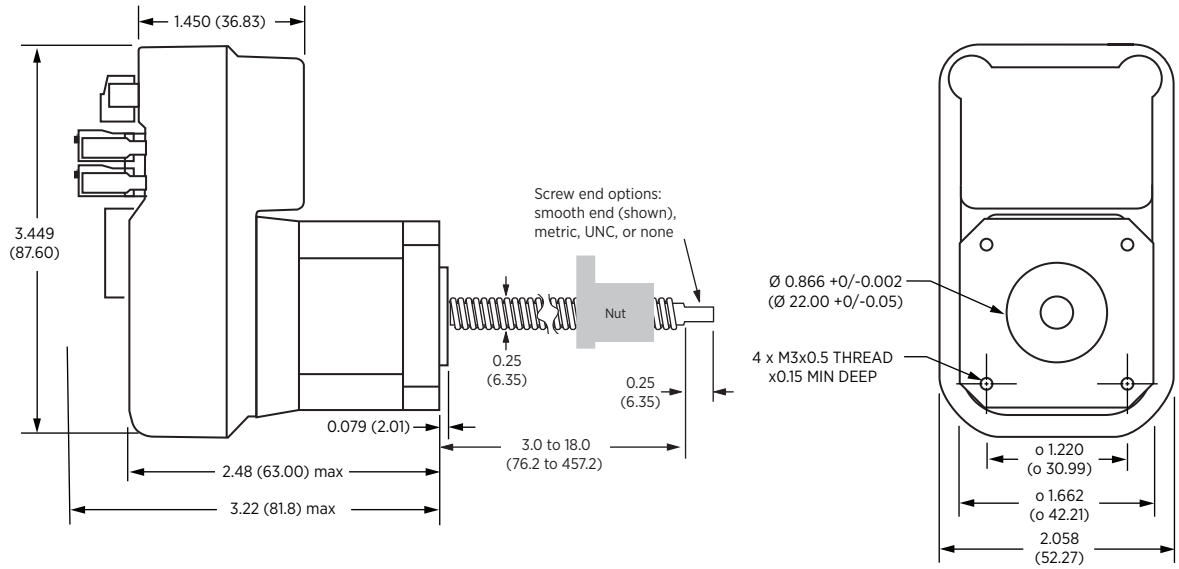

For back chassis dimensions and connector layout, refer to “Rotary Dimensions” on page 25.

Calculating Screw Length:

Screw Length = Mounting Surface Plate Thickness + Nut Length + Desired Stroke Length

Calculating Available Stroke Length:

Stroke Length = Screw Length – Nut Length – Mounting Surface Plate Thickness

The following graphic shows the linear screw dimensions and pitch information.

Screw Lead and Nut Specifications

Screw	Travel	Per rev	Per full step
A	in (mm)	0.25 (6.35)	0.00125 (0.03175)
B		0.125 (3.175)	0.00063 (0.0160)
C		0.063 (1.60)	0.00031 (0.00787)

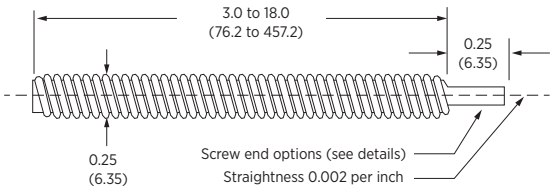

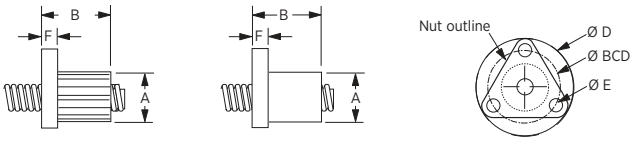

inches (mm)	A	B	D	E	F	BCD	drag torque	load limit
General purpose	0.50 (12.7)	0.75 (19.1)	1.0 (25.4)	0.14 (3.6)	0.15 (3.81)	0.75 (19.1)	free wheeling	25 lbs (11 kg)
Anti-backlash	0.50 (12.7)	0.9 (22.86)	1.0 (25.4)	0.14 (3.6)	0.18 (4.57)	0.75 (19.1)	1-to-3 oz-in / 0.7-2.1 Ncm	5 lbs (2 kg)

Screw end details

Threaded end

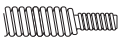

Metric end:
M4 x 0.7mm
thread to within 0.03"/
0.76 mm of shoulder

UNC end:
#8-32 UNC-2A thread
to within 0.03"/
0.76 mm of shoulder

Smooth end

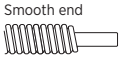

Ø 0.1967" ±0.001
Ø 5 mm ±0.003

None

Electric Cylinder Mechanical Specifications

Electric cylinder range of motion is limited by the stroke length with the cylinder rod end acting as a hard stop. Running the cylinder into a hard stop can damage the internal components of the cylinder.

NOTICE

RUNNING INTO A HARD STOP AND MECHANICAL DAMAGE

- Use limit sensors to limit the range of motion.
- Do not execute a motion that will exceed the stroke length of the device.
- Do not use the product in applications where excessive external force or impact force is applied to the rod end.

Failure to follow these instructions can result in equipment damage.

Cylinder Travel Specifications

			Screw A	Screw B	Screw C	Screw D
Screw	Lead	inches	0.100	0.250	0.500	1.000
		mm	2.54	6.35	12.7	25.4
	Diameter	inches	0.25	0.25	0.25	0.25
		mm	6.35	6.35	6.35	6.35
Travel	Per rev	inches	0.375	0.20	0.167	0.0833
		mm	9.525	5.08	4.233	2.116
	Per full step	inches	0.00125	0.0013	0.0025	0.0050
		mm	0.03175	0.03302	0.0635	0.127

Flange Mounting Plates

The following graphic shows an LMD electric cylinder with the flange mounting option.

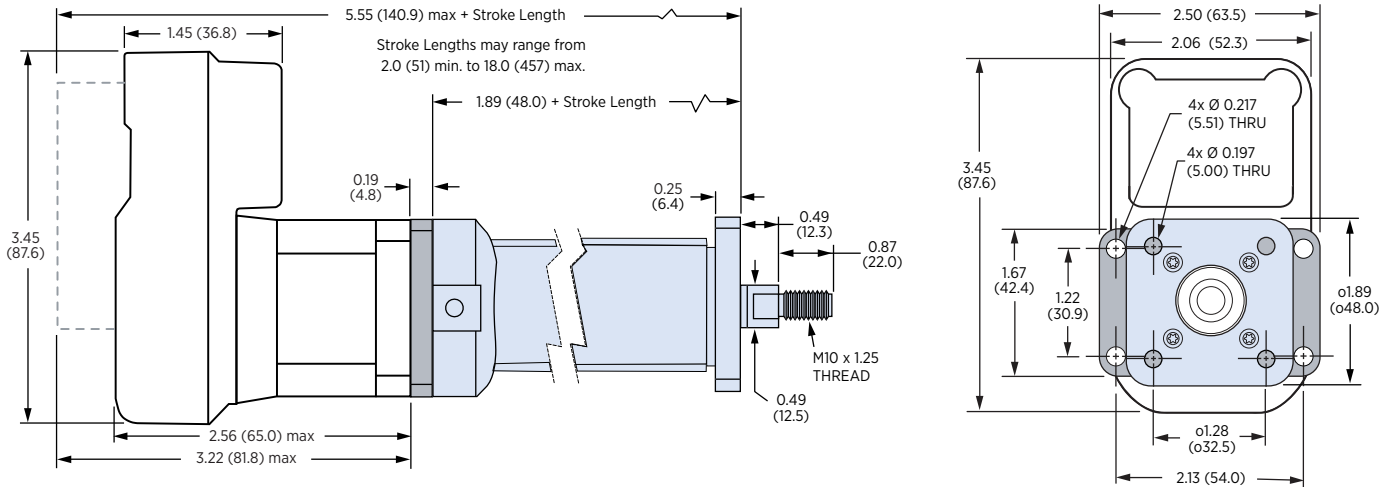

Foot Mounts

The following graphic shows the dimensions for the LMD electric cylinder with the foot mounting option.

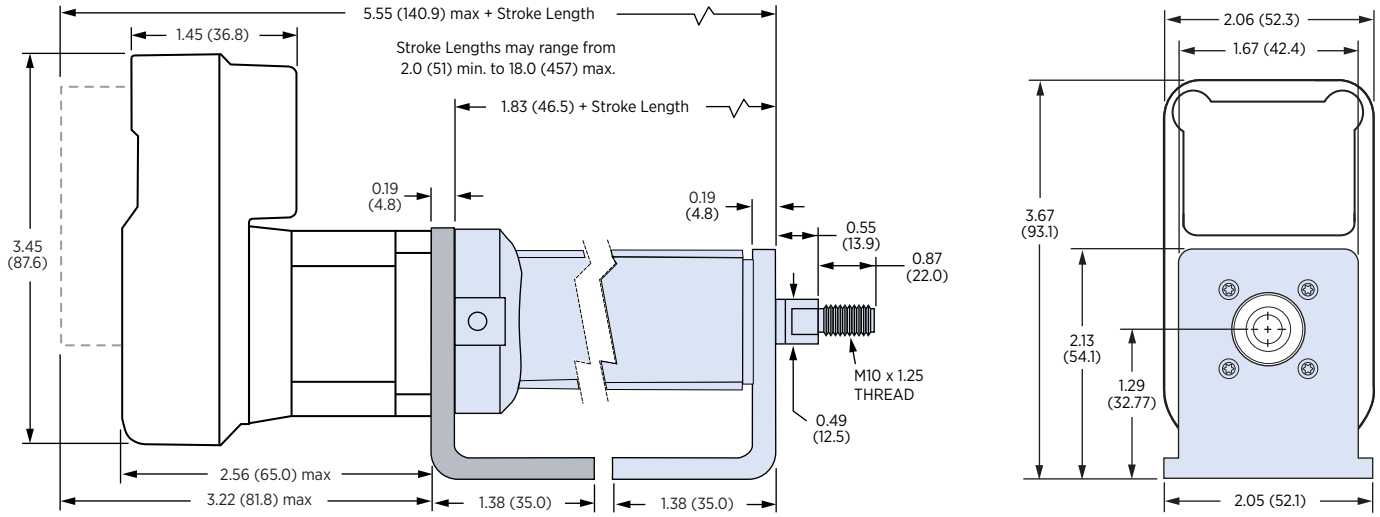

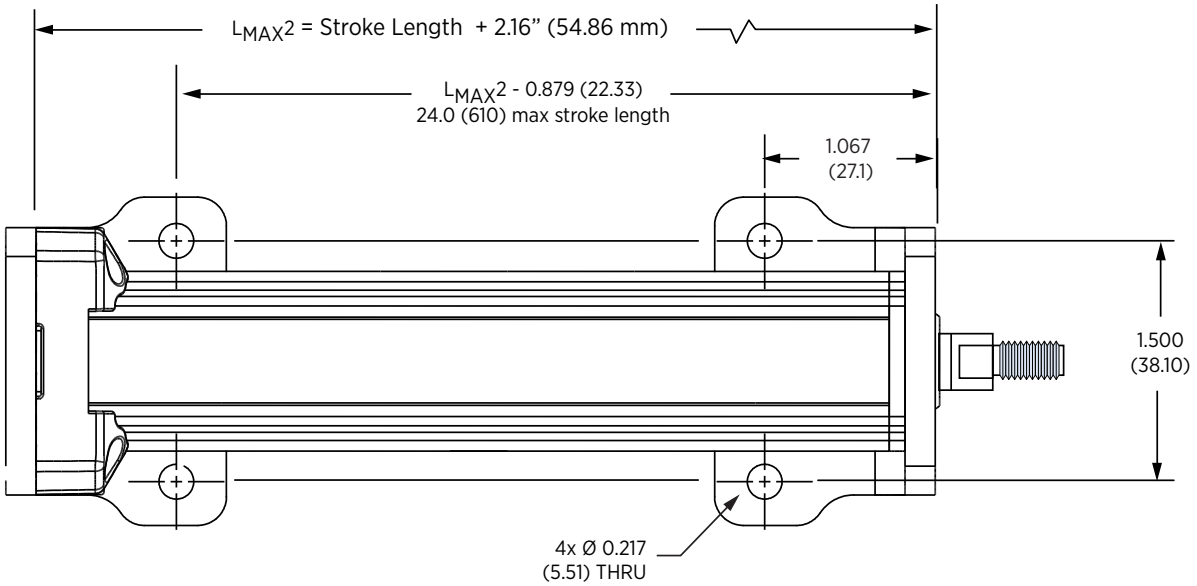

Electrical Data

This section provides an overview of the LMD connection specifications and LED status information.

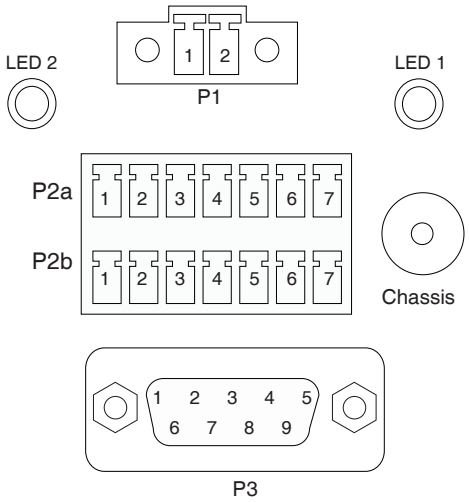

P1 Connector - Supply Voltage (VDC)

Refer to the following table for LMD•42 supply voltage information.

		LMD•42
Nominal voltage [2]	[+Vdc]	24/48
Limit values min/max [1, 2]	[+Vdc]	12/48
Ripple at nominal voltage	[+Vpp]	4.6
Max. current input[1]	[A]	2.0

1 The actual power requirement is often significantly lower, because the maximum possible motor torque is usually not required for operation of a system.

2 UL 508C rating to 48VDC, posted max ratings conforms to CE low voltage directive.

P2a and P2b Connectors - Multifunction Interface

Signal Inputs

The signal input functions are programmable in function. They may be used as sinking or sourcing based upon the bias of the **INPUT _ REFERENCE**.

Voltage range	[+Vdc]	5 ... 24
Input current (5V)	[mA]	8.7
Input current (24V)	[mA]	14.6
Input frequency	[kHz]	5
Isolation		Galvanic
Protection class		III

Analog Input

Voltage mode 0 - 5	[Vdc]	0 ... 5
Voltage mode 0 - 10	[Vdc]	0 ... 10
Current loop mode	[mA]	0 ... 20
Resolution	[Bits]	12
Impedance by mode		
0 - 5 V	[MΩ]	5
0 - 10 V	[kΩ]	1.25
0 - 20 mA	[Ω]	5
Isolation		None

Signal Output

Voltage open-collector	[Vdc]	60
Voltage open-emitter	[Vdc]	7
Current open-collector	[mA]	5.5
Current open-emitter	[mA]	5.5
Isolation		Galvanic

Auxiliary Supply Voltage VDC

Auxiliary power is used to maintain power to the logic circuits and retain information stored in counters, registers, and user variables in the event of system power loss. It is not a required connection.

Limit values min/max	[+Vdc]	12 ... 24
Ripple at max voltage	[+Vpp]	2.4
Max. current input	[mA]	200

P3 Connector - Service/Communication Interface

CAN Bus

CAN 2.0b active bus is optically isolated.

Node ID		11 and/or 29 bit
Baud rate	[kbps]	10 ... 1000
Isolation		Galvanic

LED Indicators

The LMD has two LEDs for status indication.

- LED 1: Status of the power supply
- LED 2: The CANopen status LED shows the states as specified in the CAN in Automation (CiA) DR-303-3, Indicator Specification.

Color	State	Status
Power Indication (LED 1)		
Off	None	No Power
Green	Solid	+VDC supply in range
	Flashing	+VDC off, drive on AUX power
Red	Solid	+VDC supply out of range
	Flashing	+VDC off, AUX power out of range
CANopen Status (LED 2)		
Green	Solid	The Device is in the OPERATIONAL state
	Single Flash	The Device is in STOPPED state
	Flashing	The Device is in the PREOPERATIONAL state
Red	Solid	The CAN controller is bus off
	Single Flash	At least one of the error counters of the CAN controller has reached or exceeded the error level (too many error frames).
	Double Flash	A guard event (NMT-Slave or NMT-master) or a heartbeat event (Heartbeat consumer) has occurred.
	Triple Flash	The SYNC message has not been received within the configured communication cycle period time out (see Object Dictionary Entry 0x1006).

Rotary Motor Data

Rotary Specifications

		Single	Double	Triple
Holding torque	oz-in (N-cm)	44 (31)	58 (41)	88 (62)
Detent torque	oz-in (N-cm)	1.7 (1.2)	2.1 (1.5)	3.5 (2.5)
Rotor inertia	oz-in-sec^2 (kg-cm^2)	0.0005 (0.038)	0.0008 (0.057)	0.0012 (0.082)
Radial load limit:				
End of shaft	lb (kg)	4.7 (2.0)	4.7 (2.0)	4.7 (2.0)
Center of shaft flat	lb (kg)	6.5 (2.9)	6.5 (2.9)	6.5 (2.9)
Center of shaft	lb (kg)	8.5 (4.8)	8.5 (4.8)	8.5 (4.8)
Axial load limit	lb (kg)@1500RPM	10 (4.5)	10 (4.5)	10 (4.5)
Weight	oz (g)	14.6 (385)	16 (454)	18.4 (522)

Rotary Performance

The graphic below shows the speed-torque performance curves for a LMD•42 for the following test condition:

hMT OFF: 100% current 0.84 oz damper, inertia: 0.18589 oz-in^2

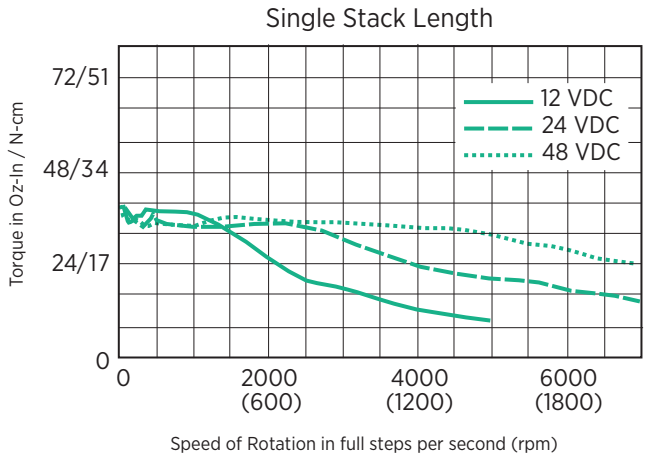

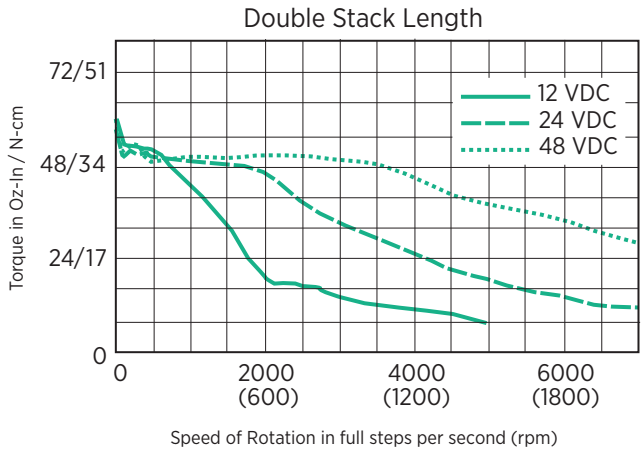

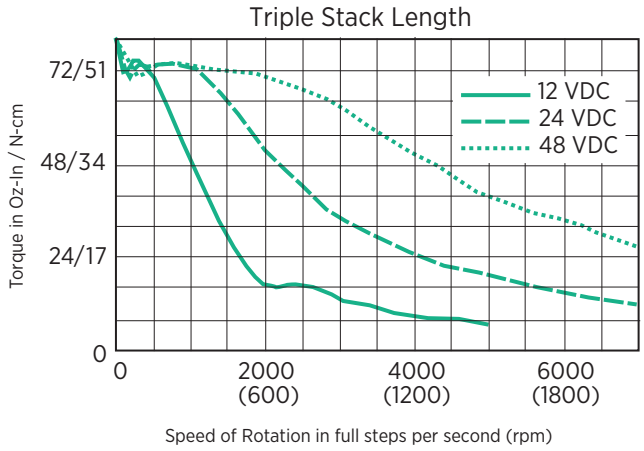

External Linear Actuator Data

Linear Actuator Specifications

The following table shows the external linear actuator specifications for the LMD•42:

Specifications		Units	Value
Rotor inertia		oz-in-sec2	0.0005
		kg-cm2	0.038
Maximum screw misalignment		degrees	±1
Maximum thrust[1]	general purpose nut	lb	25
		kg	11
	anti-backlash nut	lb	5
		kg	2
Maximum repeatability	general purpose nut	in	0.005
		mm	0.127
	anti-backlash nut	in	0.0005
		mm	0.0127
Weight (without screw)		oz	13.6
		g	385

1 Performance data for maximum force/load is based on a static load and will vary with a dynamic load.

Linear Actuator Performance

The graphic below shows the speed-force performance curves for an LMD•42:

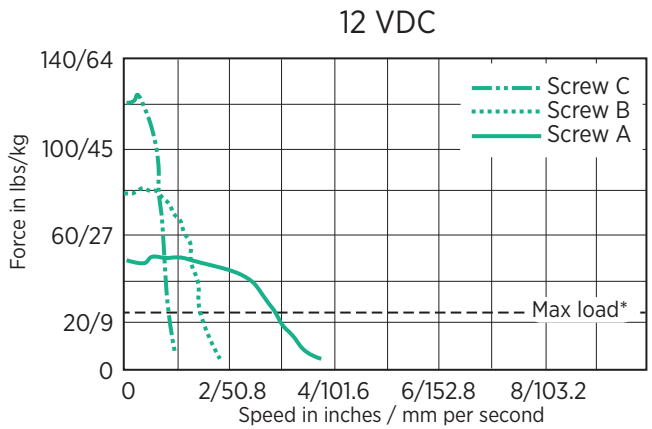

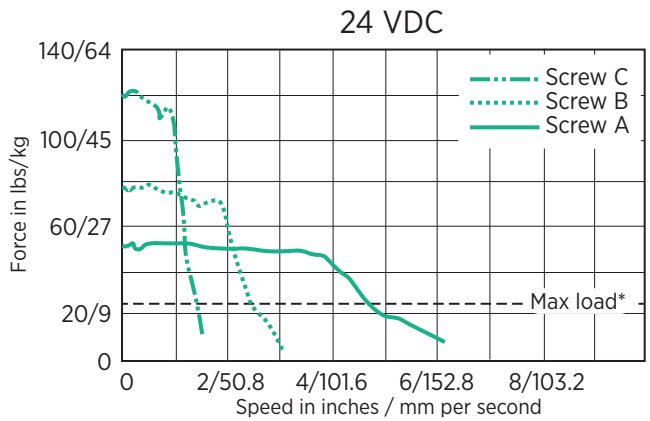

Screw Key:

Screw A - 0.25 (6.35 mm) per revolution

Screw B - 0.125 (3.175 mm) per revolution

Screw C - 0.063 (1.588 mm) per revolution

NOTE: Do not exceed the rated thrust limit of the nut being used:

General purpose nut: 25 lbs (11 kg)

Anti-backlash nut: 5 lbs (2 kg)

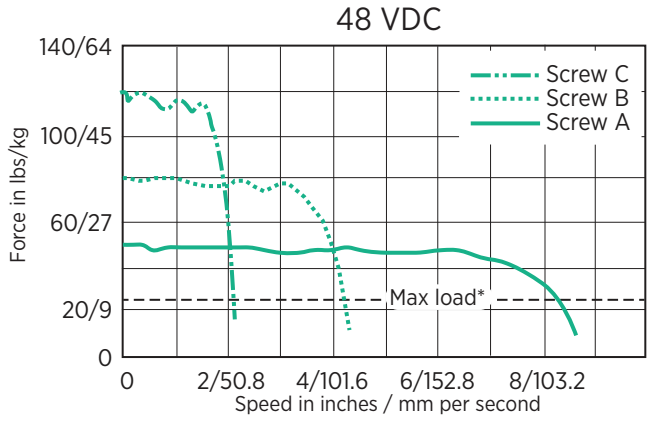

Electric Cylinder Data

Electric Cylinder Specifications

The table below lists the electric cylinder actuator specifications for the LMD•42:

Specifications		Units	Value
Rotor inertia		oz-in-sec^2	0.0005
		kg-cm^2	0.038
Maximum thrust[1]	PEEK blend nut	lbs	225
		kg	102
Accuracy		± inches per inch	0.0003
		± mm per cm	0.007
Backlash	PEEK blend nut	in	0.002
		mm	0.05
End play		inches @ lbs	0.002 @ 2
		mm @ N	0.05 @ 9
Weight (without screw)		oz	13.6
		g	385

1 Performance data for maximum force/load is based on a static load and will vary with a dynamic load.

Electric Cylinder Performance

The graphic below shows the speed-force performance curves for the LMD•42 Electric Cylinder:

SCREW A - 0.100” rev

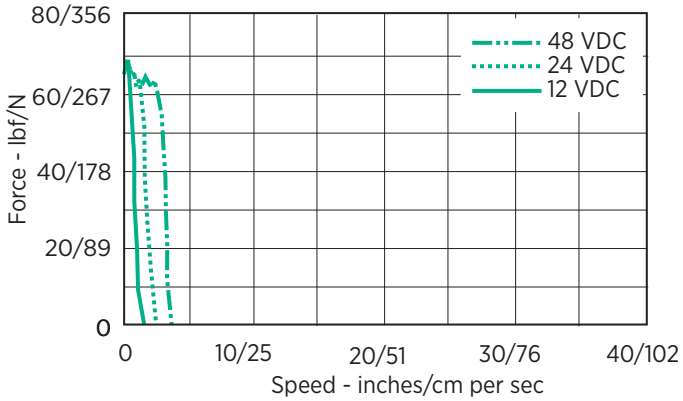

SCREW B - 0.250” rev

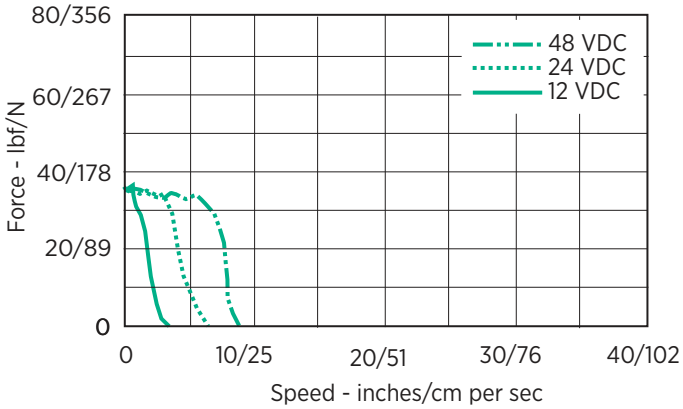

SCREW C - 0.500” rev

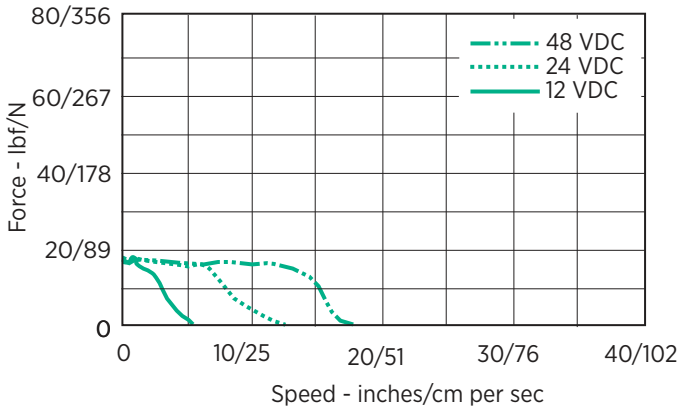

SCREW D - 1.000” rev

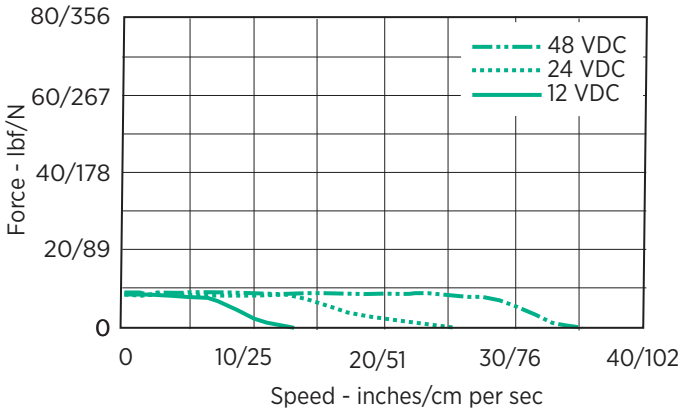

Chapter 3:
Engineering

What's in this Chapter?

This chapter contains information on the application of the product that is vital in the design phase.

This chapter includes the following topics:

Topic	Page
External Power Supply Units	36
Auxiliary Power Supply	39
Wiring and Shielding	39
Ground (Earth) Design	40
Monitoring Functions	41

External Power Supply Units

The VDC, AUX_PWR, and INPUT_REFERENCE supply voltages are connected with many exposed signal connections in the drive system.

⚠ DANGER

ELECTRIC SHOCK POSSIBLE

- Use an DC power supply unit that meets voltage requirements.
- Connect the negative output of the power supply unit to PE (ground).

Failure to follow these instructions can result in death or serious injury.

When working on power supply wiring and inserting or removing power connectors, it may cause unintended behavior and possible destruction of the system components.

⚠ CAUTION

UNINTENDED BEHAVIOR AND DESTRUCTION OF SYSTEM COMPONENTS

- Disconnect the primary side of the power supply to power down the DC supply.
- Do not connect or disconnect the power supply while power is applied.
- Connect a “transient suppressor” across the switch to prevent arcs and high-voltage spikes for battery operated systems.

Failure to follow these instructions can result in injury or equipment damage.

Supply Voltage +VDC

General

The power supply unit must be rated for the power requirements of the drive. The supply voltage and current can be found in the technical data.

The real power requirements are often significantly lower because the maximum possible motor torque is usually not required for normal operation of a system.

When designing the system, note that the input current of the drive is higher during the motor acceleration phase than during constant movement.

Regeneration Condition

Note the following for drives with large external mass moments of inertia or for highly dynamic applications:

Motors return regeneration energy during deceleration or back driving/overhauling load. The DC bus can store a limited amount of energy in the capacitors. Connecting additional capacitors to the DC bus increases the amount of energy that can be stored.

If the capacity of the capacitors is exceeded, the excess energy must be discharged via internal or external braking resistors.

Overvoltage conditions can be limited by adding a braking resistor with a corresponding braking resistor controller. This converts the regenerated energy to heat energy during deceleration.

⚠ CAUTION

LOSS OF CONTROL DUE TO REGENERATION CONDITION

Regeneration conditions resulting from braking or external driving forces may increase the VDC supply voltage to an unexpected level. Components not rated for this voltage may be destroyed or cause malfunctions.

- Verify that all VDC consumers are rated for the voltage occurring during regeneration conditions (for example limit switches).
- Use only power supply units that will not be damaged by regeneration conditions.
- Use a braking resistor controller, if necessary.

FAILURE TO FOLLOW THESE INSTRUCTIONS CAN RESULT IN INJURY OR EQUIPMENT DAMAGE.

Power Supply Cabling

The following specifications will provide information to help protect against electromagnetic interference (EMI) and radio frequency interference (RFI). The actual cable type, wire gauge, shield type, and filtering devices used are dependent on the environment, application, and system.

⚠WARNING

UNINTENDED EQUIPMENT OPERATION DUE TO EMI AND RFI

- Do not exceed a DC power supply cable length of 50 feet (15.2 m) to an LMD.
- Always use shielded/twisted pairs for the LMD DC power supply cable.

Failure to follow these instructions can result in death or serious injury.

Cable length, wire gauge, and power conditioning devices play a major role in the performance of the LMD.

The following graphic illustrates the cable configuration for DC power supply cabling under 50 feet (15.2 m) long. If cabling of 50 feet (15.2 m) or longer is required, the additional length may be gained by adding an AC power supply cable.

Correct American Wire Gauge (AWG) wire size is determined by the current requirement plus cable length.

The graphic below shows DC power supply cabling under 50’ (15.24 m)

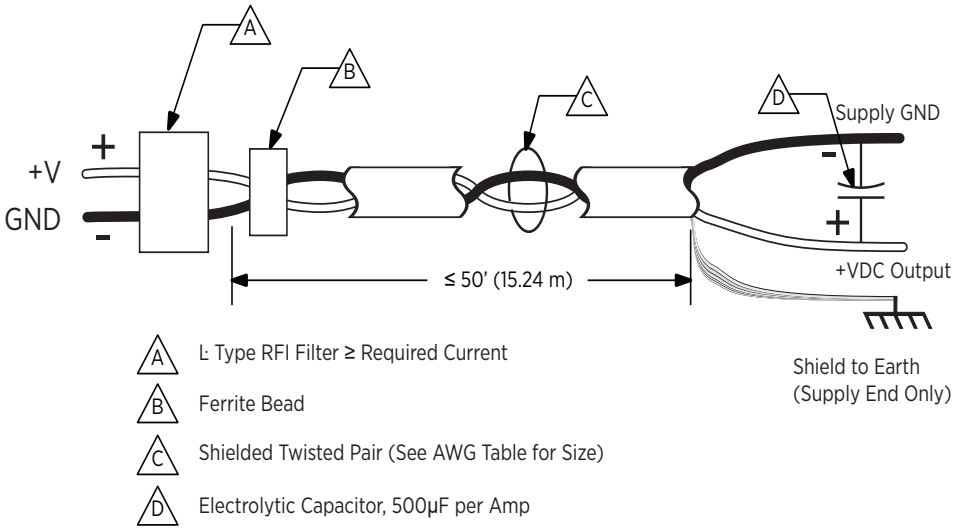

The graphic below shows power supply cabling 50’ (15.2 m) or greater, AC power to a full wave bridge.

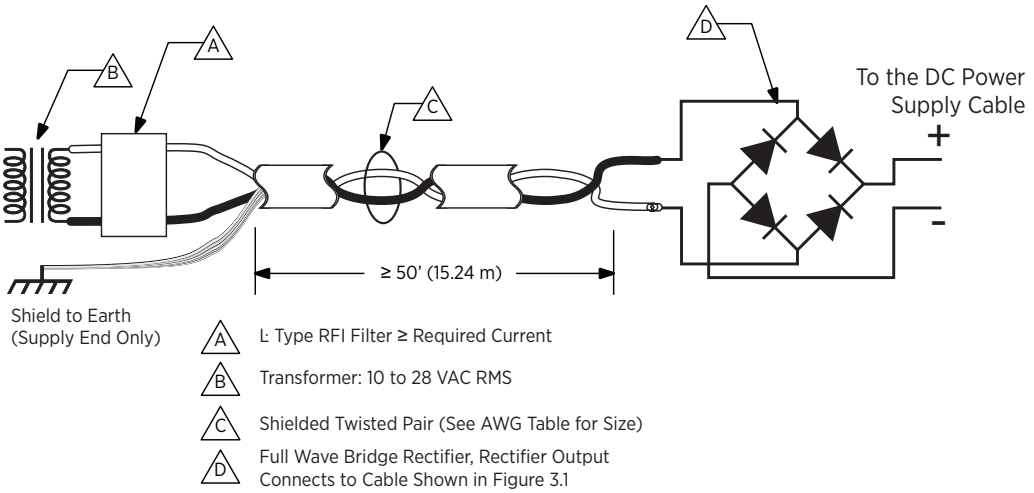

The graphic below shows power cabling 50’ (15.2 m) or greater, DC power to an unregulated DC power supply.

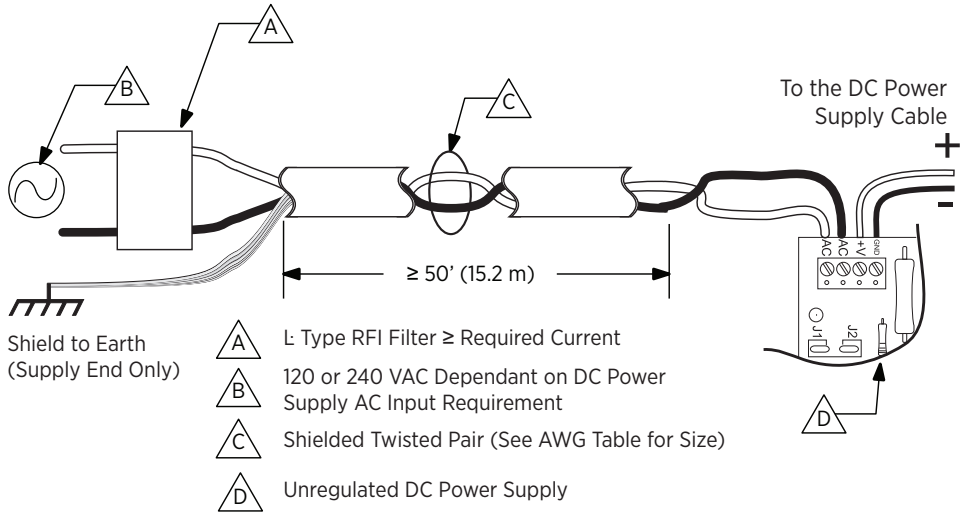

Wire Size

System EMI performance may be impacted by the wire size, length, and current.

Length [ft (m)]	10 (3.0)	25 (7.6)	50 (15.2)	75 (22.9)	100 (30.5)
Amps (peak)	Minimum AWG (mm^2)				
1	20 (0.5)	20 (0.5)	18 (0.75)	18 (0.75)	18 (0.75)
2	20 (0.5)	18 (0.75)	16 (1.5)	14 (2.5)	14 (2.5)
3	18 (0.75)	16 (1.5)	14 (2.5)	12 (4.0)	12 (4.0)
4	18 (0.75)	16 (1.5)	14 (2.5)	12 (4.0)	12 (4.0)

Auxiliary Power Supply

The auxiliary logic supply is an optional power supply used to provide power to the logic circuitry of the LMD in the event of main system power outage. This supply will retain all system data.

There are no special considerations required when choosing this supply beyond:

Voltage ..... +12 to +24 VDC

Current ..... 200 mA/LMD

Wiring and Shielding

Electrical “noise” (interference) is always present in a system that involves high power and low signal circuitry. Regardless of the power configuration used in the system, there are some wiring and shielding rules that should be followed to keep signal-to-noise ratio (SNR) as small as possible.

Rules of Wiring

- Power Supply and Motor wiring should be shielded twisted pair, and these lines should not run parallel to signal carrying wires.
- Power ground return should be as short as possible.
- For installations which utilize separate electric motor drives and stepper motors, wiring between the driver and motor should be shielded twisted pairs using 20 gauge wire for motor current less than 4.0 amps and 18 gauge or better for motor current 4.0 amps or higher. A common mode choke may be required in each of the motor phase lines to reduce shield current levels.
- Power Supply wiring should be shielded twisted pairs. Use 18 gauge wires if load is less than 4 amps, or 16 gauge for more than 4 amps.
- Never use a “daisy-chain” power supply wiring scheme to system components. This type of power distribution will result in degraded system reliability and performance as a result of poor EMC and ground-loop issues. In cases where ‘daisy-chaining” is unavoidable, the user is responsible for final system reliability and performance. The use of conservatively selected wire gauge and the use of decoupling capacitors
(i.e., a combination of capacitors to provide for acceptable low frequency and high frequency noise reduction) at each electronic drive should be considered as a minimum.

Rules of Shielding

- The shield must be tied to zero-signal reference potential. In order for shielding to be effective, it is necessary for the shield to be grounded.
- The shield must be connected so that shield currents drain to signal-earth.
- The shield should be tied to a single point to prevent ground loops.

The following graphic illustrates system power wiring.

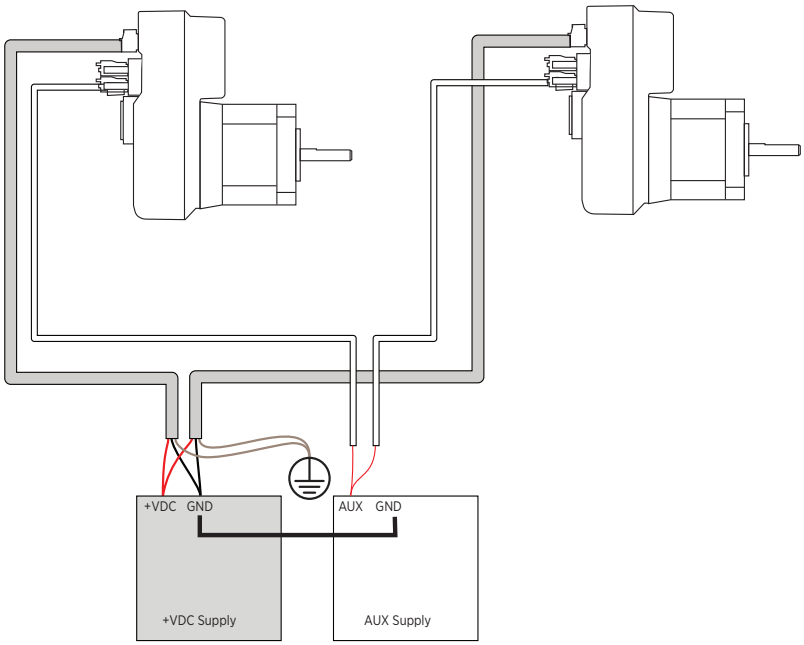

Ground (Earth) Design

The ground (earth) connections of all interfaces are connected, including the ground for the VDC supply voltage.

The exception to this is the logic ground connection of the I/O interface, which is optically isolated.

The following points must be considered when wiring drives in a system:

- The voltage drop in the **VDC** power supply lines must be kept below 1V. At higher ground potential differences between different drives, the communication and control signals may be affected.
- For larger distances between system components, the use of decentralized power supply units (located close to the individual drives), may be needed to supply DC voltage. The ground connections of the individual power supply units must be connected with the largest possible conductor cross section.
- If the master controller (e.g., PLC, industrial PC, etc.) does not have galvanically isolated outputs for the drives, verify that the current of the DC supply voltage has no path back to the power supply unit via the master controller. Therefore, the master controller ground may be connected to the DC supply voltage ground at a single point only. This is usually the case in the control cabinet. The ground contacts of the various signal connectors in the drive are therefore not connected; there is already a connection via the VDC supply voltage ground.
- If the controller has a galvanically isolated interface for communication with the drives, the ground of this interface must be connected to the signal ground of the first drive. This ground may be connected to a single drive only to avoid ground loops. This also applies to a galvanically isolated CAN connection.

Equipotential Bonding Conductors

Potential differences can result in excessive currents on the cable shields. Use equipotential bonding conductors to reduce currents on the cable shields. The equipotential bonding conductor must be rated for the maximum current flowing. Practical experience has shown that the following conductor cross sections can be used:

- AWG 5 (16 mm²) for equipotential bonding conductors up to a length of 650 ft (200 m)
- AWG 4 (20 mm²) for equipotential bonding conductors with a length of more than 650 ft (200 m)

Protective Earth

The LMD should be earthed to a common system earth point. Multiple earth points within a system may be at different potentials which can lead to recirculating currents (ground loops).

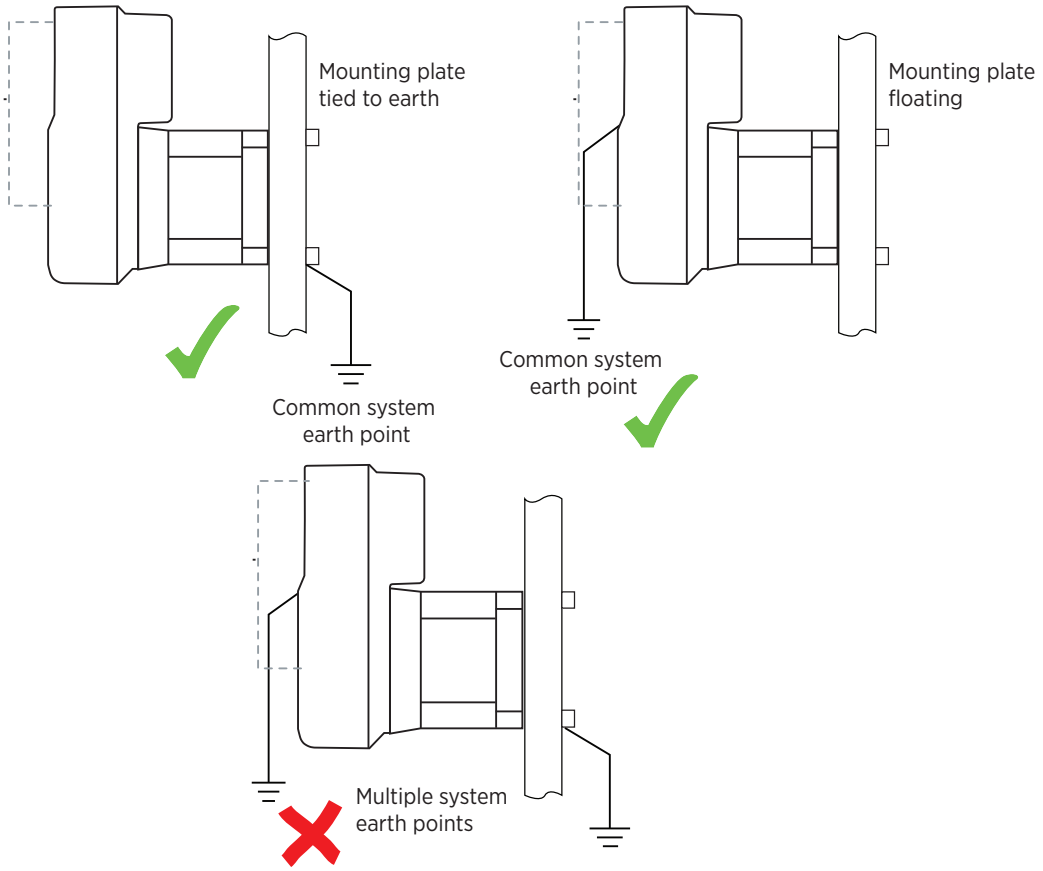

Monitoring Functions

The monitoring functions in the product can help to understand system errors and reduce the risks involved in a machine malfunction. These monitoring functions may not be used as safety-related functions.

The following monitoring functions are available and can be monitored by two methods:

1. **Software**: may be monitored using software via the service interface.
2. **Hardware**: may be monitored using the signal outputs via the multifunction interface.

Chapter 4:
Installation

What's in this Chapter?

This chapter includes the following topics:

Topic	Page
Electromagnetic Compatibility, EMC	44
Mechanical Installation	44
Supply Voltage VDC Connection	47
Multifunction Interface Connection	49
Signal Input Circuits	50
Signal Output Circuit	53
Analog Input	53
Communications Interface Connection	54
Checking Wiring	55

⚠WARNING

INCORRECT INSTALLATION

Ensure the correct installation and maintenance of the system according to the instructions contained in the present document and other supporting documents.

Failure to follow these instructions can result in death, serious injury, or equipment damage.

The designer of any control scheme must consider the potential failure modes of control paths and, for certain critical functions, provide a means to achieve a safe state during and after a path failure. Examples of critical control functions are EMERGENCY STOP, overtravel stop, power outage, and restart.

⚠WARNING

LOSS OF CONTROL

- Separate or redundant control paths must be provided for critical functions.
- System control paths may include communication links. Consideration must be given to the implication of unanticipated transmission delays or failures of the link.
- Observe all accident prevention regulations and local safety guidelines[1].
- Each implementation of the product must be individually and thoroughly tested for proper operation before being placed into service.

Failure to follow these instructions can result in death, serious injury, or equipment damage.

1 For USA: Additional information, refer to NEMA ICS 1.1 (latest edition), "Safety Guidelines for the Application, Installation, and Maintenance of Solid State Control" and to NEMA ICS 7.1 (latest edition), "Safety Standards for Construction and Guide for Selection, Installation, and Operation of Adjustable-Speed Drive Systems".

⚠CAUTION

RISK OF INJURY WHEN REMOVING CIRCUIT BOARD PLUGS

- When removing circuit board plugs, the connectors must be unlocked.
  - Supply voltage **VDC**: Unlock by pulling at the plug housing
  - Miscellaneous: Unlock by pressing the locking lever
- Always hold the plug to remove it (not the cable).

Failure to follow these instructions can result in injury or equipment damage.

NOTICE

ELECTROSTATIC DISCHARGE

- Do not touch any of the electrical connections or components.
- Prevent electrostatic charges, for example, by wearing appropriate clothing.
- If a circuit board must be touched, do so only on the edges.
- Move the circuit boards as little as possible.
- Remove existing static charge by touching a grounded, metallic surface.

Failure to follow these instructions can result in equipment damage.

Electromagnetic Compatibility, EMC

This product meets the EMC requirements in accordance with the standard IEC 61800-3, provided that the EMC measures described in this manual are complied with during installation. If not, signal interference can cause unexpected responses of device.

⚠WARNING

SIGNAL AND DEVICE INTERFERENCE

- Install the wiring in accordance with the EMC requirements.
- Verify compliance with the EMC requirements.

Failure to follow these instructions can result in death or serious injury.

These devices are not intended to be used on a low-voltage public network which supplies power to domestic premises. Radio frequency interference is expected if used in such a network. If used in a residential or domestic premise, additional shielding and filters may be required, as determined by the systems integrator.

⚠WARNING

HIGH-FREQUENCY INTERFERENCE

- Do not use these products in domestic electrical networks.

Failure to follow these instructions can result in death or serious injury.

EMC Measures	Effect
Keep cables as short as possible. Do not install unnecessary cable loops and use short cables from the star point in the control cabinet to the external ground connection.	Reduces capacitive and inductive interference.
Ground the product via the motor flange or with a ground strap to the ground connection at the cover of the connector housing.	Reduces emissions, increases immunity.
Ground shields of digital signal wires at both ends by connecting them to a large surface or via conductive connector housings.	Reduces interference affecting the signal wires, reduces emissions.
Connect large surface areas of cable shields, use cable clamps and ground straps	Reduces emissions.

The following cables must be shielded:

- Supply voltage **VDC**
- Multifunction interface
- Communications interface

Mechanical Installation

Shock or strong pressure applied to the motor shaft may destroy the motor.

⚠CAUTION

MOTOR DAMAGE AND LOSS OF CONTROL

- Protect the motor shaft during handling and transportation.
- Avoid shocks to the motor shaft during mounting.
- Do not press parts onto the shaft. Mount parts to the shaft by gluing, clamping, shrink-fitting, or screwing.

Failure to follow these instructions can result in injury or equipment damage.

⚠WARNING

MOTOR WITHOUT BRAKING EFFECT

If power outage and faults cause the power stage to be switched off, the motor is no longer stopped by the brake and may increase its speed even more until it reaches a mechanical stop.

- Verify the mechanical situation.
- If necessary, use a cushioned mechanical stop or a suitable brake.

Failure to follow these instructions can result in death or serious injury.

⚠WARNING

LOSS OF BRAKING FORCE DUE TO WEAR OR HIGH TEMPERATURE

Applying the holding brake while the motor is running will cause excessive wear and loss of the braking force. Heat decreases the braking force.

- Do not use the brake as a service brake.
- Note that “EMERGENCY STOPS” may also cause wear
- At operating temperatures of more than 80°C (176°F), do not exceed a maximum of 50% of the specified holding torque when using the brake.

Failure to follow these instructions can result in death or serious injury.

⚠WARNING

LOAD FALLS DURING SWITCHING ON

When the brake of stepping motor drives is released and external forces are applied (vertical axes), the load may fall if the friction is low.

- In such applications, limit the load to a maximum of 25% of the static holding torque.

Failure to follow these instructions can result in death or serious injury.

Heat Dissipation

The metal surfaces of the product may exceed 70°C (158°F) during operation.

⚠CAUTION

HOT SURFACES

- Avoid unprotected contact with hot surfaces.
- Do not allow flammable or heat-sensitive parts in the immediate vicinity of hot surfaces.
- Verify that the heat dissipation is sufficient by performing a test run under maximum load conditions.

Failure to follow these instructions can result in injury or equipment damage.

If there is an incorrect arrangement of multiple motors or an improper setup, the motor may become very hot. The surface temperature of the motor must not exceed 100 °C on the surface of the motor laminations during continuous operation.

- Verify that the maximum temperature is not exceeded.
- Verify that there is sufficient heat dissipation by means of good ventilation or heat dissipation via the motor flange and mounting surface.

Mounting

The motor is designed to be mounted using four screws. The motor flange must be mounted on a flat surface to avoid mechanical tension from being transmitted to the housing. Painted surfaces have an insulating effect. During mounting verify that the motor flange is mounted in such a way as to allow for good electrical and thermal conductivity.

Mounting screw size: #6 (M3.5) Length dependent on mounting plate thickness. Screw threads into motor housing cannot exceed 0.140” (3.56 mm).

Tightening torque: Tightening torque not to exceed 7.8 lb-in (9 kg-cm).

Mounting Clearance

Leave sufficient clearance around the motor body for air flow as stepper motors can become very hot. A minimum clearance of 0.5” (12.5 mm) around the sides of the motor body is required for adequate heat dissipation.

All LMD connections are located on the rear face of the device. Refer to the cable manufacturer specifications to determine adequate bend radii.

Ambient Conditions

Observe the permissible ambient conditions as listed in “Environmental Conditions” on page 21.Electrical Installation

Interruptions of the negative connection of the controller supply voltage can cause excessively high voltages at the signal connections.

⚠WARNING

LOSS OF CONTROL

- Do not interrupt the negative connection between the power supply unit and load.
- Verify correct connection before applying power to the equipment.
- Do not connect, disconnect, or modify wiring while the supply voltage is present.

Failure to follow these instructions can result in death or serious injury.

Refer to “Engineering” on page 35 for additional information on design considerations before starting the installation.

LMD Connectors Overview

This section provides an overview of the LMD connectors. Refer to “Electrical Data” on page 29 for the electrical specifications for these connectors.

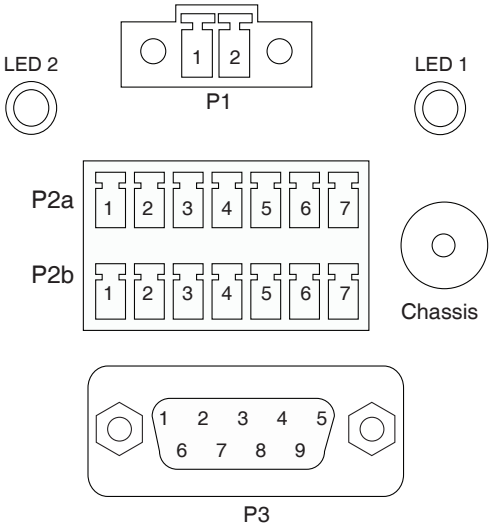

Connector	Assignment
P1	Supply voltage VDC
P2	Multifunction interface
P3	Communication interface

Supply Voltage VDC Connection

P1 Connector - Power Supply Interface Connection

Regeneration conditions resulting from braking or external driving forces may increase the **VDC** supply voltage to an unexpected level. Components not rated for this voltage may be destroyed or cause malfunctions.

⚠CAUTION

INOPERABLE EQUIPMENT DUE TO REGENERATION CONDITION

- Verify that all **VDC** components are rated for the voltage occurring during regeneration conditions (e.g., limit switches).
- Use only power supply units that will not be damaged by regeneration conditions.

Failure to follow these instructions can result in injury or equipment damage.

The connection for the DC supply voltage at the product does not have an inrush current limitation. If the voltage is switched on by means of switching the DC or hot plugging of contacts, damage to the contacts or contact welding may result.

NOTICE

DAMAGE TO CONTACTS

- Use a power supply unit that limits the peak value of the output current to a value permissible for the contact.
- Apply power to the drive by means of controlling the primary side of the power supply instead of the secondary side of the power supply.

Failure to follow these instructions can result in equipment damage.

Pin Assignment

The graphic and table below show the DC power connection pin assignment.

Signal	Function	Pin number
+12 to +48 VDC	Supply voltage	1
0 VDC	Reference potential to VDC	2

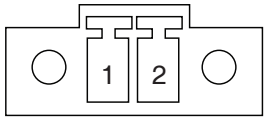

P1

Wiring/cable Specifications

Use shielded twisted pair cabling for the supply voltage **VDC**.

- Verify that wiring, cables, and connected interfaces meet the protected extra-low voltage (PELV) requirements.
- Ensure that the wiring conforms to the specified technical data.
- Conform to the information provided in the section “External Power Supply Units” on page 36 and “Ground (Earth) Design” on page 40.
- Install fuses for the power supply cable in accordance with the electrical requirements of the equipment (note the inrush currents).

System EMI performance may be impacted by the wire size, length, and current. For wire size requirements, refer to the Wire Size table on page 38.

Connecting the Supply Voltage Cable

The connector is a screw type connector. The wire gauge is determined by the length of the conductor and the amount of current required.

To interface:

- Strip 0.25” (6.35 mm) insulation.
- Insert into designated pin.
- Tighten screw to 1.9 to 2.2 lbs (0.22 to 0.25 Nm).
- Insert into P1 socket and tighten lock screws.

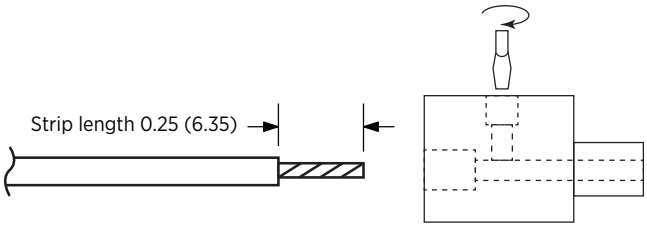

Connector (side view)

Multifunction Interface Connection

NOTE: On LMD products with a multi-turn Absolute Encoder, the Analog input located at P2a, pin 6 is replaced by the External Battery pack inputs: See Appendix D on page 71 for details specific to the Absolute Encoder variant.

P2 Connector - Multifunction Interface Pin Assignments

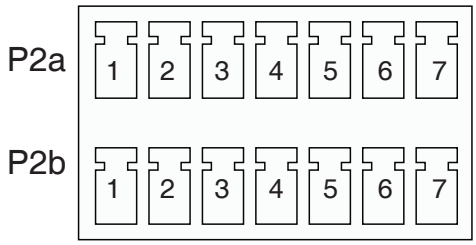

Pin	Signal	Function	I/O
1a	INPUT_REFERENCE	Biases the input as sinking or sourcing	—
2a	N/C	Not connected	—
3a	IN2	General purpose programmable input 2	I
4a	IN3	General purpose programmable input 3	I
5a	IN4	General purpose programmable input 4	I
6a	ANALOG_IN	Analog input	I
7a	LOGIC_GND	Logic ground (non-isolated)	—

Pin	Signal	Function	I/O
1b	AUX_PWR	12 ... 24V auxiliary power input maintains logic circuitry and position information in the event of supply voltage VDC power loss.	—
2b	N/C	Not connected	—
3b	N/C	Not connected	—
4b	N/C	Not connected	—
5b	N/C	Not connected	—
6b	SIGNAL_OUTPUT_ COLLECTOR	High speed signal output collector	O
7b	SIGNAL_OUTPUT_ EMITTER	High speed trip output emitter	O

Wiring/Cable Specifications

- Shielded cable
- Twisted-pair cables
- Grounding of the shield at both ends only if on equipotential ground plane

Max cable length[1]	feet (m)	328 (100)
Minimum conductor cross section	AWG (mm^2)	24 (0.205)
Maximum conductor cross section	AWG (mm^2)	20 (0.518)
Stripping length	inches (mm)	0.25 (6.35)

1 The length depends on the conductor cross section and the driver circuit used

- Use equipotential bonding conductors.
- Verify that wiring, cables, and connected interfaces meet the PELV requirements.

Connecting the Cable

The connector is a spring clamp type terminal strip.

To interface:

- Strip 0.25” (6.0 mm) insulation.
- Use a small screwdriver to push in the designated pin’s spring clamp.
- Insert stripped wire into designated pin.
- Once all wires are Inserted, plug connector into P2 socket

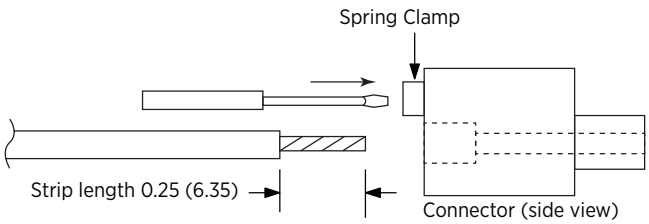

Signal Input Circuits

The signal inputs may be interfaced as sinking or sourcing as determined by the bias of the **INPUT _ REFERENCE**. Connecting the **INPUT _ REFERENCE** to a 5 ... 24V power source will provide sinking inputs. Connecting it to ground will provide sourcing inputs.

The **ACTIVE LOGIC HIGH/LOW** state of the inputs are configured using **Index 2000h Subindex 2**.

The inputs are galvanically isolated by means of optical isolation.

Line driven input (sinking):

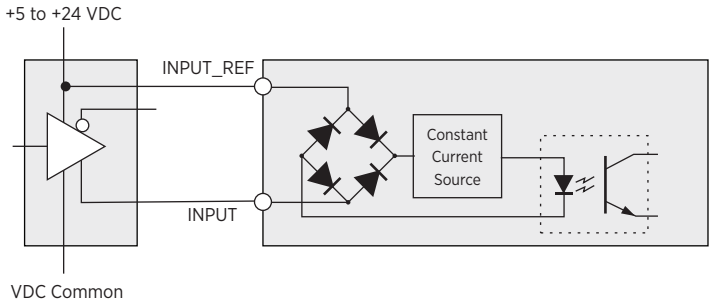

Line driven input (sourcing):

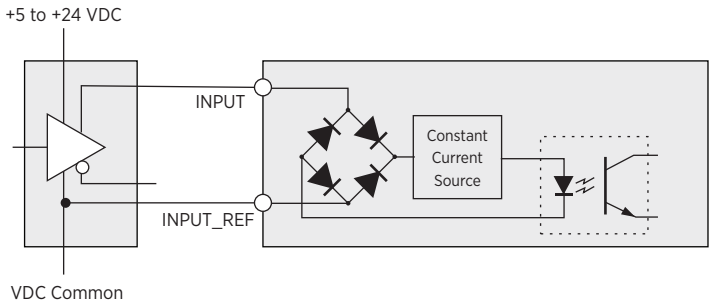

Open collector (sinking):

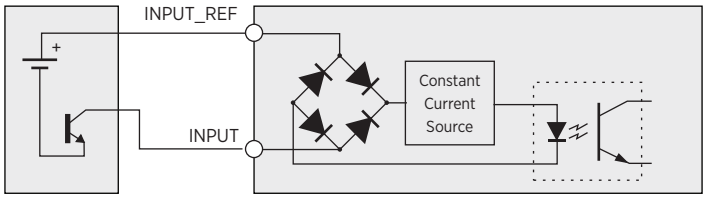

Open collector (sourcing):

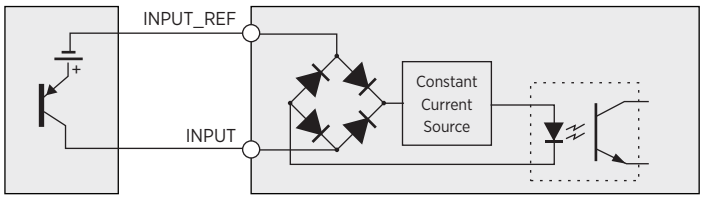

Signal Input Wiring and Usage Examples

Mechanical Switches

Sinking Operation: In the schematic below, the inputs will float at a 24V level (HIGH), then be at ground (LOW) when the switch is closed.

Sourcing Operation: The configuration shown below can be switched to a sourcing configuration by reversing the bias on the Input Reference, with the power supply return connected to the reference. The inputs will then be at ground (LOW), and at 24V(HIGH) when the switch is closed.

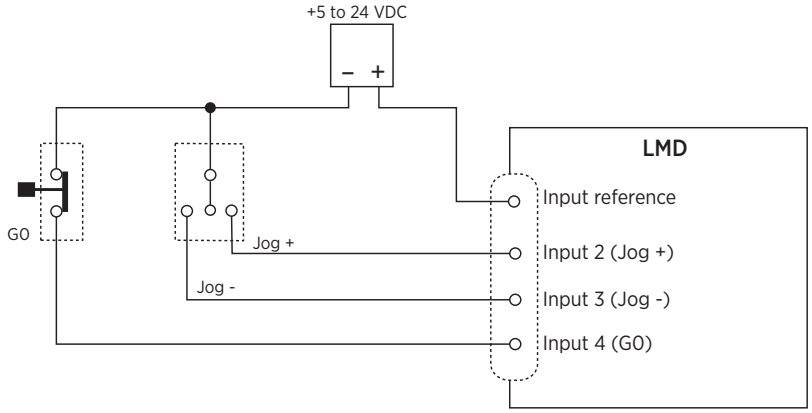

Refer to the LMD MCode or the appropriate fieldbus manual for full setup and configuration details for the inputs.

Input #	Function	Switch state	MCode setup string (Is=[in #],[func],[active])	Notes
2	JOG +	normally open	IS=2, 7, 0	Set IN 2 as + JOG, active when low (switch closed)
3	JOG –	normally open	IS=3, 8, 0	Set IN 3 as – JOG, active when low (switch closed)
4	G0	normally closed	IS=4, 4, 1	Set IN 4 as G0, active when high (switch open)

NPN Sensors in a Sinking Home/limit ± Configuration

A common configuration is to have two sensors which define the PLUS and MINUS limits of travel, and a third to home the axis. The following illustrates three NPN sensors connected to the LMD inputs 2 - 4 in that configuration.

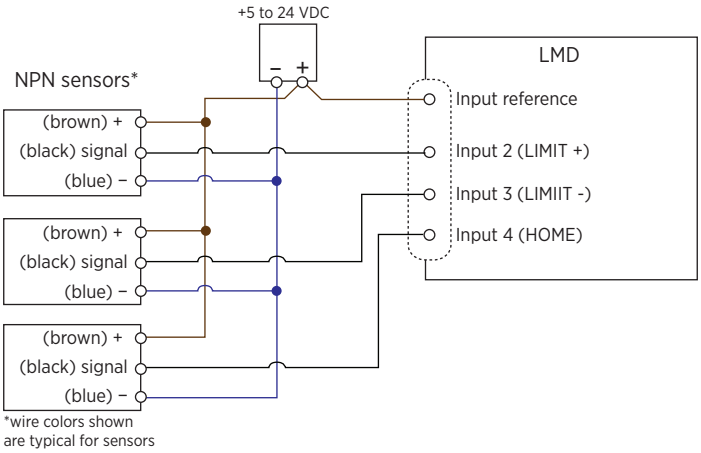

Refer to the LMD MCode manual or the appropriate fieldbus manual for full setup and configuration details for the inputs.

Input #	Function	Switch state	MCode setup string (Is=[in #],[func],[active])	Notes
2	LIMIT +	normally open	IS=2, 2, 0	Set IN 2 as LIMIT +, active when low (switch closed)
3	LIMIT –	normally open	IS=3, 3, 0	Set IN 3 as LIMIT –, active when low (switch closed)
4	HOME	normally closed	IS=4, 1, 1	Set IN 4 as HOME, active when high (switch open)

PNP sensors in a sourcing general purpose configuration

The following graphic illustrates three (3) PNP sensors connected to the LMD inputs 2 - 4. These inputs are configured as general purpose and may be used in an MCode program to perform branch or call subroutine operations.

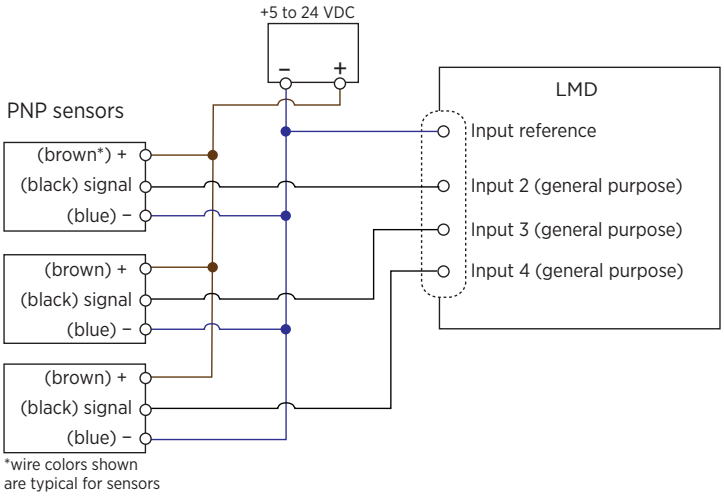

Refer to the LMD MCode manual or the appropriate fieldbus manual for full setup and configuration details for the inputs.

Input #	Func-tion	Switch state	MCode setup string (Is=[in #],[func],[active])	Notes
2	GP	normally open	IS=2, 0, 1	Set IN 2 as general purpose, active when high (switch closed)
3	GP	normally open	IS=3, 0, 1	Set IN 3 as general purpose, active when high (switch closed)
4	GP	normally open	IS=4, 0, 1	Set IN 4 as general purpose, active when high (switch closed)

Signal Output Circuit

The signal output provides indication of trip condition(s). The condition(s) which will trigger this output are programmable.

The output is galvanically isolated by means of an optic isolation.

Signal output:

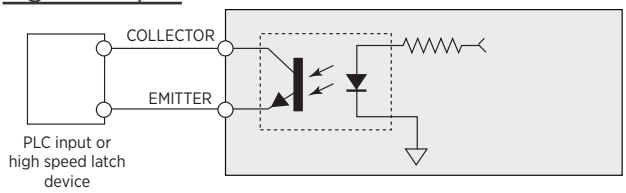

Analog Input

The **ANALOG _ IN** may be configured to detect one of three input types:

- 0 - 5V
- 0 - 10V
- 0 - 20 mA

ANALOG _ IN signal input:

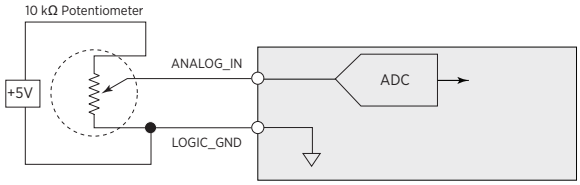

Analog Input Wiring and Usage Examples

The analog input may be used in either voltage or current loop modes with two range settings available for each mode:

- Voltage: 0 to 5V or 0 to 10 V
- Current: 0 to 20 mA

A typical use for the analog input would be to read the value from a sensor within an MCode program and set a position or velocity based upon that value.

NOTE: The Logic (Analog) ground pin is non-isolated (common with power ground.)

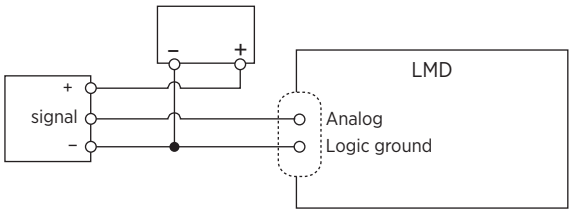

Refer to the LMD MCode manual, or the appropriate fieldbus manual for full setup and configuration details for the analog input.

Loop	Range	MCode setup string (Is=5,[mode],[range])	Notes
Voltage	0 to 5V	Is=5, 9, 0	Set input to voltage mode, 0 to 5 volt range
	0 to 10V	IS=5, 9, 1	Set input to voltage mode, 0 to 10 volt range
Current	0 to 20 mA	Is=5, 10, 0	Set input to current mode, 0 to 20 mA range

Communications Interface Connection

P3 Connector - Service Interface Pin Assignments

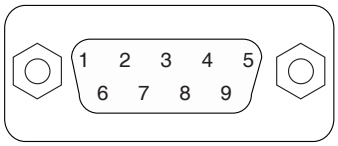

P3

Pin	Signal	Function
1	—	Reserved
2	CAN_L	CAN_L bus line (dominant low)
3	CAN_GND	CAN Ground
4	—	Reserved
5	(CAN_SHLD)	Optional CAN Shield
6	(GND)	Optional Ground
7	CAN_H	CAN_H bus line (dominant high)
8	—	Reserved
9	CAN_V+	Power to CAN converter (internally powered by the LMD)

Function

The drive system is commissioned via the communications interface using either the CANopen Configuration Utility, part of the LSS (available for download from https://novantaims.com/dloads/), or by using a CANopen Layer Setting Service.

Connector Style

DB9F

Wiring/cable Specifications

- Shielded cable
- Twisted-pair cables
- Grounding of the shield at both ends

Refer to CiA DR-303-1: Cabling and Connector Pin Assignment, for current cabling recommendations and specifications.

- Use equipotential bonding conductors.
- Use pre-assembled cables to reduce the risk of wiring errors.
- Verify that wiring, cables, and connected interfaces meet the PELV requirements.

Terminating Resistor

Both ends of the entire bus system must be terminated with a terminating resistor. The resistor value is 120Ω connected between the CAN_H and CAN_L lines.

Setting the Address and BAUD Rate

Each device on the network is identified by a unique, adjustable node ID which may be set using the CANopen Configuration Utility, which is part of the LSS, or by using CANopen Layer Setting Service as defined in CiA document DSP-305.

Factory settings:

- Node ID: 41h
- BAUD rate: 1M

The following is an example of CANopen network wiring:

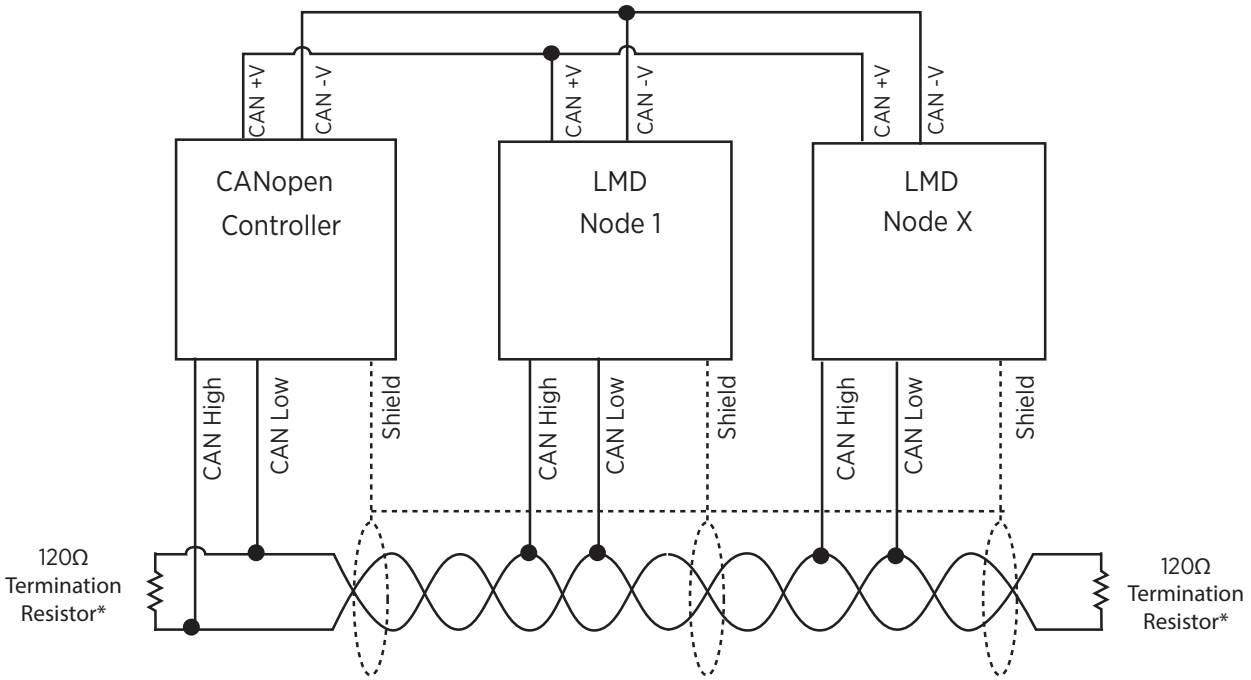

*120Ω Termination Resistors are required between CAN High and CAN Low at both ends of the cabling per ISO-11828

NOTE: Power is internally supplied by the LMD. External power is not required.

Checking Wiring

Check the following before applying power to the device:

- Are all cables and connectors properly installed?
- Are there any live, exposed cables?
- Are the signal wires properly installed?

Chapter 5:
Configuration

What's in this Chapter?

This chapter includes the following topics:

Topic	Page
Preparing for Configuration	58
Configuration via Layer Setting Services	58

Drives may perform unintended movements because of incorrect wiring, incorrect settings, incorrect data, or other errors.

Interference (EMC) may cause unpredictable responses in the system. Further, the behavior of the drive system is governed by stored data or settings. Unsuitable settings or data may trigger unintended movements or responses to signals and disable monitoring functions.

⚠WARNING

UNINTENDED MOVEMENT

- Carefully install the wiring in accordance with the EMC requirements.
- Do NOT operate the drive system with unknown settings or data.
- Verify that the stored data and settings are correct.
- Carefully run configuration tests for all operating states and potential error situations.
- Verify the functions after replacing the product and also after making changes to the settings or data.
- Only start the system if there are no persons or obstructions in the zone of operation.

Failure to follow these instructions can result in death or serious injury.

Rotating parts may cause injuries and may catch clothing or hair. Loose parts or parts that are unbalanced may be ejected.

⚠WARNING

ROTATING PARTS

- Verify correct mounting and installation of all rotating parts.
- Use a cover to help protect against rotating parts.

Failure to follow these instructions can result in death or serious injury.

If power outage and faults cause the power stage to be de-energized, the motor may increase its speed until it reaches a mechanical stop.

⚠WARNING

MOTOR WITHOUT BRAKING EFFECT

- Verify the mechanical situation.
- If necessary, use a cushioned mechanical stop or a suitable brake.

Failure to follow these instructions can result in death or serious injury.

The motor may move as a result of the reaction torque; it may tip and fall.

⚠WARNING

FALLING PARTS

- Mount the motor securely so it will not break loose during strong acceleration.

Failure to follow these instructions can result in death or serious injury.

Metal surfaces of the product may exceed 70°C (158°F) during operation.

⚠CAUTION

HOT SURFACES

- Avoid unprotected contact with hot surfaces.
- Do not allow flammable or heat-sensitive parts in the immediate vicinity of hot surfaces.
- Verify that the heat dissipation is sufficient by performing a test run under maximum load conditions.
- Check the temperature during test runs.

Failure to follow these instructions can result in injury or equipment damage.

Preparing for Configuration

The following tests are required before configuration:

- The device may be commissioned in system or out of system.
- Only supply voltage **VDC** and the Service interface connections are required for configuration.
- Ensure that this chapter is read in it's entirety, as many setup parameters are mode-specific.

For configuration and programming, a computer with the LSS or equivalent Layer Setting Service master is required.

NOTE: Detailed usage instructions and screen captures of the LSS are found in the LSS software manual, which is available for download from: https://novantaims.com/dloads/

Installing the LSS

NOTE: The CANopen Configuration Utility is the only vehicle for performing firmware upgrades.

- Computer running Windows 7 or greater.
- The MD-CC501-000 or equivalent PEAK/Phytec dongle required to use the CANopen configuration GUI.
- Reference the LSS product manual for installation and configuration information.

Configuration via Layer Setting Services

The LMD CANopen may be commissioned using Layer Setting Service. Reference the CANopen Fieldbus Manual and CiA DS-305 for more information.

Chapter 6:
Operation

What's in this Chapter?

This chapter describes the basic functions of the drive.

This chapter includes the following topics:

Topic	Page
Basics	60
CANopen DSP402 Operation Modes	62
Operation by hMT Modes	64
I/O Operation	65

Basics

Mode of Operation

The “LMD CANopen”, which uses DS301 communication profile, is the interface between device profiles and CAN bus. It was specified in 1995 under the name DS301 and defines uniform standards for common data exchange between different device types under CANopen.

The DSP402 device profile describes standardized objects for positioning, monitoring, and settings of drives.

- **Profile position**: defines the positioning of the drive. Speed, position, and acceleration can be limited, and profiled moves using a trajectory generator are also possible.
- **Homing mode**: describes the various methods to find a home position, reference point, date, or zero point, on start up, or via an immediate mode command.
- **Profile Velocity**: used to control velocity of the drive with no special regard of the position. It supplies limit functions and trajectory generation.
- **Profile Torque**: (available on closed loop and absolute encoder models only) defines the torque control with all related parameters.
- **Cyclic synchronous position mode**: the trajectory generator is located in the control device, not in the drive device. In cyclic synchronous mode it provides a target position to the drive device, which performs position control, velocity control, and torque control.

Hybrid Motion Technology

NOTE: hMT is only available on LMD CANopen models with an encoder.

Hybrid Motion Technology is the core control technology that enables the multi-mode functionality of the LMD by overcoming many of the limitations inherent in stepper systems. Two major limitations addressed by this technology are:

- Loss of motor synchronization and subsequent stalling.
- Excessive motor heat due to limited current control options.

Loss of Synchronization

Synchronous motion in a stepper motor requires that the lead/lag relationship between the rotor and stator be within +/- 2 motor full steps. As this relationship drifts toward the 2 step point the torque available to the load is reduced, with maximum constant torque available at the ≤1 full step point.

Conditions that can cause the stepper motor to lose synchronization and stall are:

Rotor Lags Stator:

- Acceleration is too rapid to apply enough torque to overcome the inertia of the load.
- Transient load condition at velocity (i.e., load being increased on a conveyor).

Rotor Leads Stator:

- Deceleration is too rapid to hold the load within the +/- 2 full step range.
- Overhauling load condition where the momentum of the load is greater than the torque supplied to maintain constant velocity.

The following graphic shows the control bounds for hMT.

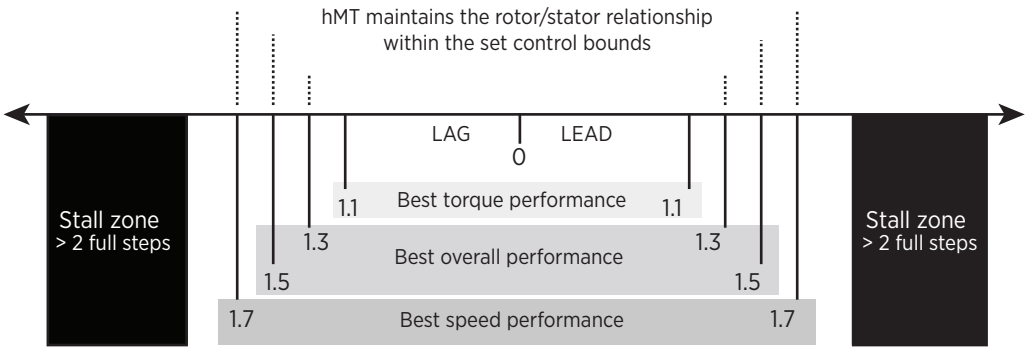

Hybrid Motion Technology uses a high speed feedback loop to tightly maintain the rotor/stator relationship within a specified range, or control bounds.

See the CANopen Fieldbus Manual Object 2702h for configuration options.

Variable Current Control

Historically stepper motor drivers operate at two adjustable current levels:

1. Running current, the current level in use when the shaft is moving.
2. Holding or reduction current, the current level in use when the shaft is at rest.

Variable current control uses hMT to accurately measure and track the rotor/stator relationship and apply current as needed. An example of this can be seen when current is applied during acceleration or deceleration, the current is reduced to the level required to move the load when the axis is at velocity. This can lead to greater power efficiency and reduced motor operating temperatures.

Position Make-up

When active, the position make-up function stores the difference between commanded pulses and actual motor steps in a register. At the completion of the move the lead or lag pulses will be reinserted into the profile and moved to the commanded position at one of two velocity presets.

Overview of Motor Phase Current

NOTE: LMD CANopen models without an encoder will operate in fixed run/hold current only!

The motor phase current of the drive is influenced by the following factors:

- The setting of the run current.
- The setting of the holding current.
- The setting of the holding current delay time.
- Current control defined as fixed or variable.

Refer to the following graphic for an overview of motor phase current.

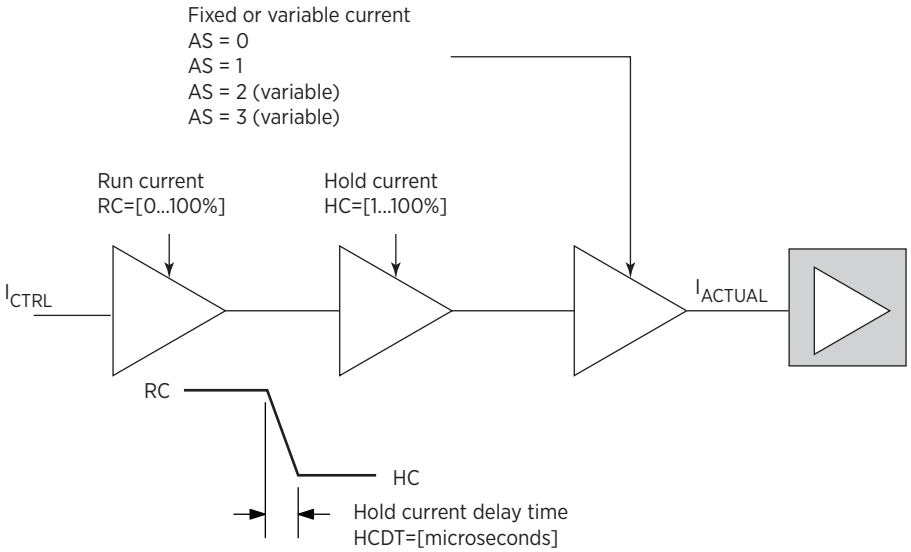

CANopen DSP402 Operation Modes

The LMD operates as a node on a CANopen network and is controlled by a CANopen master.

Details are available in the CANopen Fieldbus Manual, available for download from:

https://novantaims.com/dloads/

Profile Position Mode

A **target _ position** is applied to the trajectory generator. It is generating a **position _ demand _ value** for the position control loop described in the position control function section. These two function blocks are optionally controlled by individual parameter sets.

At the input to the trajectory generator, parameters may have optional limits applied before being normalized to internal units. Normalized parameters are denoted with an asterisk. The simplest form of a trajectory generator is just to pass through a **target _ position** and to transform it to a **position _ demand _ value** with internal units (increments) only.

Refer to the following graphic for an overview of DSP402 profile position mode.

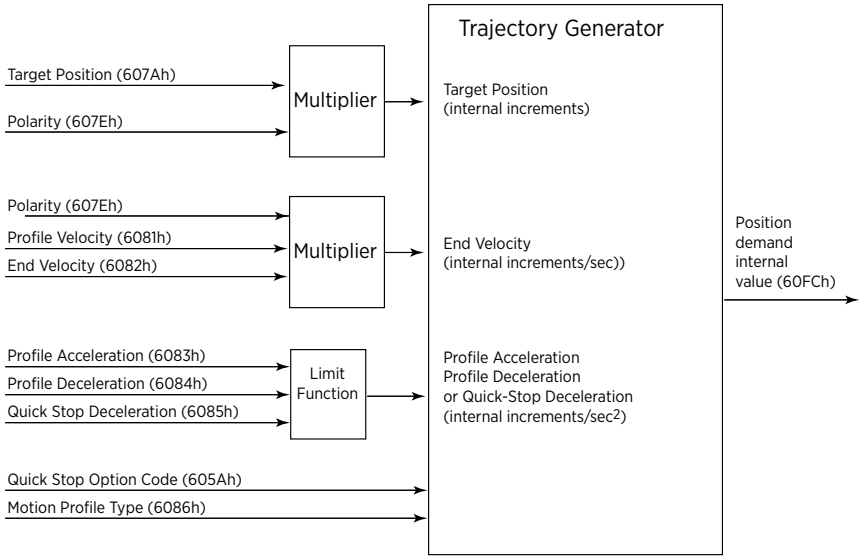

Profile Velocity Mode

The profile velocity mode covers the following sub-functions:

- Demand value input via trajectory generator.
- Velocity capture using position sensor or velocity sensor.
- Velocity control function with appropriate input and output signals.
- Monitoring of the profile velocity using a window-function.
- Monitoring of velocity actual value using a threshold.

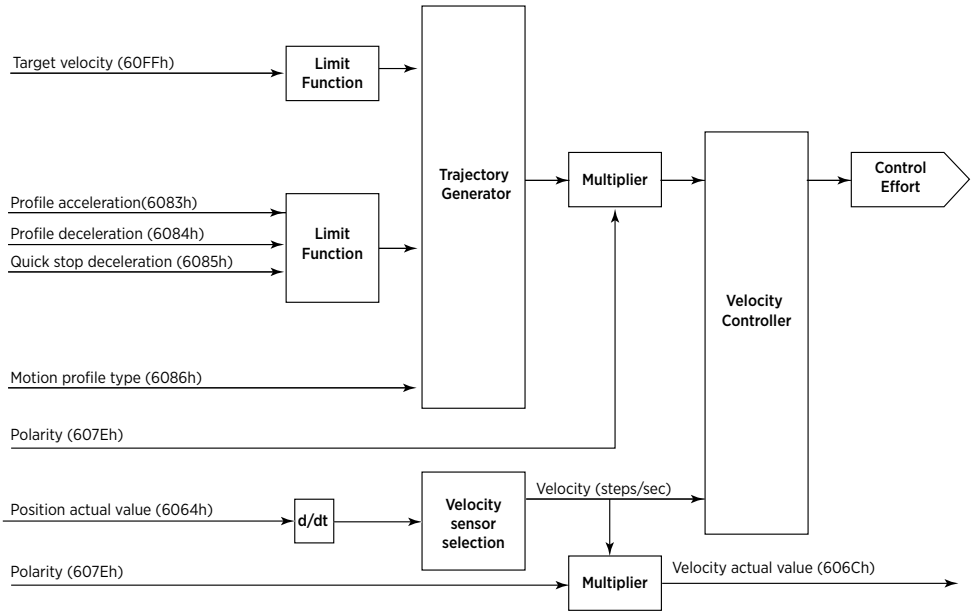

Profile Torque Mode

NOTE: Profile torque mode is only available on LMD CANopen models with an encoder.

The profile torque mode allows the motor to transmit the target torque value, which is processed via the trajectory generator in concert with the hMT logic.

The LMD will maintain constant torque on the load at the commanded torque speed.

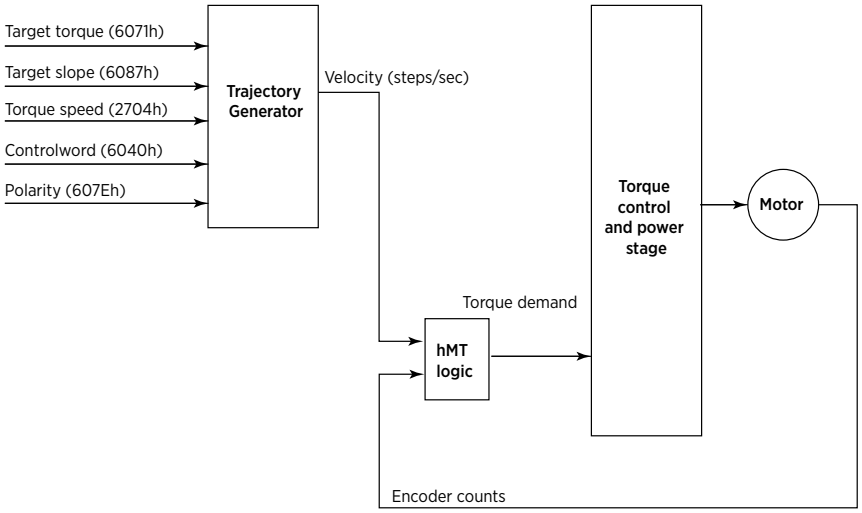

Operation by hMT Modes

The LMDxC, LMDCx, and LMDAx feature four operational modes for hMT:

1. hMT off
2. hMT on (fixed current)
3. hMT on (variable current)
4. Torque control

The selected mode will have a major effect on how the device will operate during a move.

The hMT operating mode may also be changed either programmatically or immediately provided a move is not in progress.

hMT Off (Bypass)

With hMT disabled, the motion block of the device will operate as a standard integrated stepper controller/drive/motor.

Commands for absolute or relative positioning, or slew at velocity are received via the CAN bus and processed as commanded, bypassing the hMT logic block.

The following graphic shows a block diagram for a system with hMT disabled:

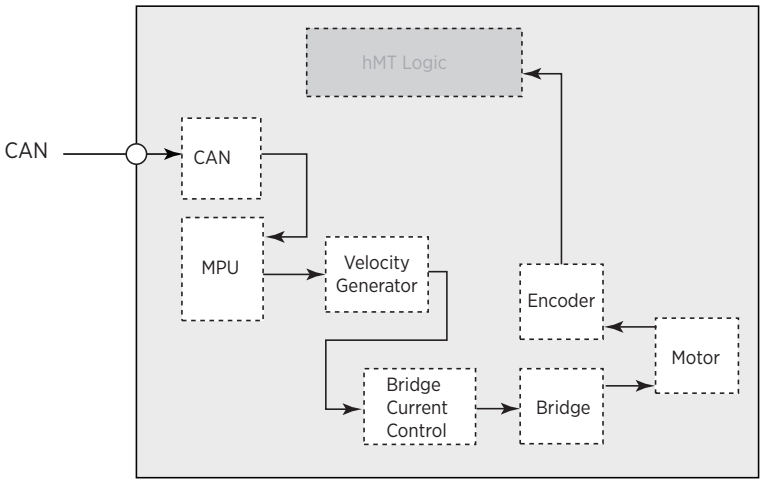

In bypass mode, the current control will be fixed at the set run and hold current percent levels.

Encoder functions such as stall detection and position maintenance are available in bypass mode, provided that the LMD model is equipped with an encoder.

hMT On (Fixed Current)

With hMT enabled in fixed current mode, hMT will use the integrated encoder to maintain the rotor/stator relationship within the set control bounds.

Commands for absolute or relative positioning, or slew at velocity, are received via the CAN bus and processed through the hMT logic block. Feedback from the encoder is compared with commanded clock pulses from the velocity generator. The output of this comparison is used to keep the rotor/stator relationship within the control bounds, thus eliminating loss of synchronization.

The variance between commanded position and actual position is stored in the lead/lag register and is used to perform a position correction move if make-up is enabled.

The device will use the run and hold current settings for bridge current.

The following graphic shows a block diagram for a system with hMT enabled:

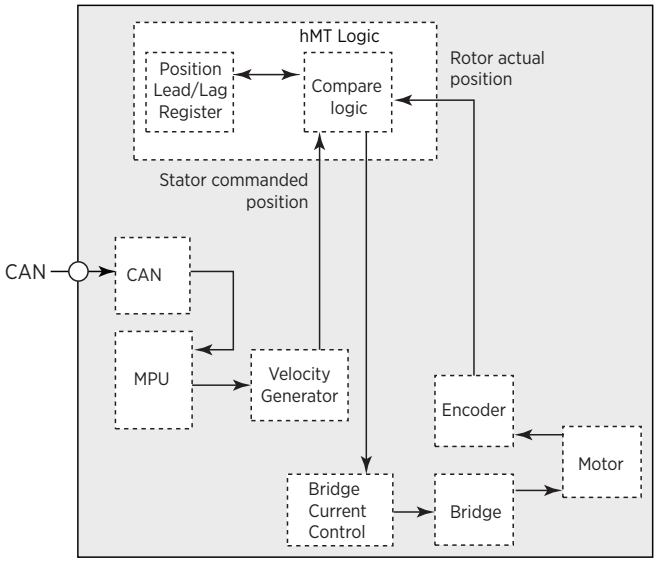

hMT On (Variable Current)

With hMT enabled in variable current mode, hMT will function the same as described for fixed current mode with the difference that current control will be in variable mode.

In variable current mode, hMT will adjust the bridge current to the amount required to move the load. The set run current (**RC**) will be used as the maximum threshold.

With hMT in variable current mode, the device may use less power and run cooler, depending on load and duty cycle.

hMT On (Torque Mode Motion)

With hMT in torque mode, hMT will maintain constant torque on the load at the speed required to maintain that torque.

The amount of torque used is set using the torque percent (**TQ**) parameter. The maximum speed for torque mode is set using the torque speed (**TS**) parameter. When Profile Torque Mode is activated the LMD will automatically go into torque mode.

I/O Operation

The LMD CANopen NEMA 17 (42 mm) features the following I/O points:

- Three general purpose inputs.
- One 12-bit analog input.
- One high-speed signal output.

For detailed descriptions of each I/O configuration parameter, please reference the CANopen Fieldbus Manual.

Inputs

The general purpose inputs are +5 to +24 VDC tolerant optically isolated general purpose, homing, or limit inputs.

Signal Output

The signal output is an open emitter or open collector 5.5 mA signal output, configurable as general purpose function or high speed trip functions.

Appendix A:
Diagnostics and Troubleshooting

Operation State and Error Indication

Temperature Monitoring

Sensors in the drive measure the temperature of the power stage. If the permissible maximum temperature is exceeded, the power stage is de-energized. Indication is displayed by reading object 2019h Output h-bridge temperature options, subindex 01h.

Stall Detection (hMT Disabled)

Detecting a stall condition may be accomplished by monitoring the encoder via the communications interface on models equipped with an encoder.

When hMT is enabled, a stopped shaft or locked rotor will be indicated by assertion of a locked rotor error.

Locked Rotor (hMT Enabled)

A locked rotor indication identifies the condition where the rotor/stator relationship exceeded lead/lag limits and/or locked rotor timeout **(LT)** as specified during parameterization. When this condition occurs the power stage will disable and a locked rotor error is asserted.

A locked rotor error condition can only occur when hMT is enabled. This status may be read using the hMT status bits or error codes.

LED Indicators

The LMD has two LEDs for status indication.

- LED 1: Status of the power supply.
- LED 2: The CANopen status LED shows the states as specified in CiA DR-303-3 Indicator specification.

Color	State	Status
Power Indication (LED 1)		
Off	None	No Power
Green	Solid	+VDC supply in range
	Flashing	+VDC off, drive on AUX power
Red	Solid	+VDC supply out of range
	Flashing	+VDC off, AUX power out of range
CANopen Status (LED 2)		
Green	Solid	The Device is in the OPERATIONAL state
	Single Flash	The Device is in STOPPED state
	Flashing	The Device is in the PREOPERATIONAL state
Red	Solid	The CAN controller is bus off
	Single Flash	At least one of the error counters of the CAN controller has reached or exceeded the error level (too many error frames).
	Double Flash	A guard event (NMT-Slave or NMT-master) or a heartbeat event (Heartbeat consumer) has occurred.
	Triple Flash	The SYNC message has not been received within the configured communication cycle period time out (see Object Dictionary Entry 0x1006).

Appendix B:
Accessories and Spare Parts

Accessories

Source Commissioning Software

The latest version of the CANopen Configuration Utility, part of the LSS, available for download from https://novantaims.com/dloads/

Communications Converter

Description	Part number
USB to CANopen communication converter	MD-CC501-000

The communication converter kit contains a converter, a six foot cable, and a terminating resistor plug. Drivers are on the included CD or may be downloaded from the internet. Refer to the following graphic for the MD-CC501-000 dimensions and connection information.

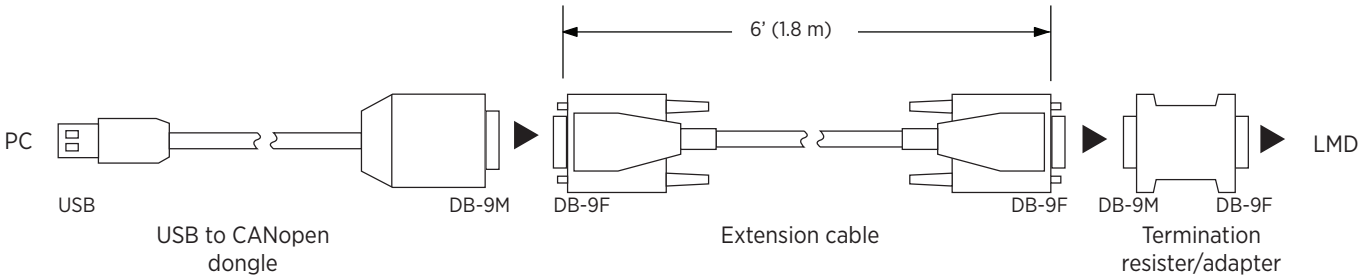

Mating Connectors

Description	Part number
Replacement connector kit	CK-15

Replacement connector kit (CK-15) contains the following replacement connectors for P1 and P2.

- P1: 2-pin power connector
- P2a: 7-pin I/O top connector (orange)
- P2b: 7-pin I/O bottom connector (blue)

Appendix C:
Service, Maintenance, and Disposal

The designer of any control scheme must consider the potential failure modes of control paths and, for certain critical functions, provide a means to achieve a safe state during and after a path failure. Examples of critical control functions are EMERGENCY STOP, overtravel stop, power outage, and restart.

⚠WARNING

LOSS OF CONTROL

- Separate or redundant control paths must be provided for critical functions.
- System control paths may include communication links. Consideration must be given to the implication of unanticipated transmission delays or failures of the link.
- Observe all accident prevention regulations and local safety guidelines.[1]
- Each implementation of the product must be individually and thoroughly tested for proper operation before being placed into service.

Failure to follow these instructions can result in death, serious injury, or equipment damage.

1 For USA: Additional information, refer to NEMA ICS 1.1 (latest edition), "Safety Guidelines for the Application, Installation, and Maintenance of Solid State Control" and to NEMA ICS 7.1 (latest edition), "Safety Standards for Construction and Guide for Selection, Installation, and Operation of Adjustable-Speed Drive Systems".

⚠CAUTION

RISK OF INJURY WHEN REMOVING CIRCUIT BOARD PLUGS

- When removing circuit board plugs, note that the connectors must be unlocked.
- — Supply voltage VDC: Unlock by pulling at the plug housing
- — Miscellaneous: Unlock by pressing the locking lever
- Always hold the plug to remove it (not the cable).

Failure to follow these instructions can result in injury or equipment damage.

Opening the LMD heat sinks can affect factory-set encoder alignment and impact hMT. Tamper seals ensure factory hardware settings remain unaltered and match the encoder alignment set during the manufacturing process. If a tamper seal is broken, the LMD product warranty is void.

⚠WARNING

UNINTENDED EQUIPMENT OPERATION

- Do not open the LMD housing for any reason.
- Contact a Novanta IMS service representative if the product exhibits unexplained erratic or incorrect operation.

Failure to follow these instructions can result in death or serious injury.

NOTICE

The product may only be repaired by a certified customer service center. No warranty or liability is accepted for repairs made by unauthorized persons.

Service Address

If an error cannot be resolved from the information provided in this manual, contact a Novanta IMS service representative. Have the following details available:

- Nameplate (type, identification number, serial number, DOM, ...)
- Type of error (e.g., LED flash code, error number. etc.)
- Previous and current circumstances
- Assumptions concerning the cause of the error

Also include this information if returning the product for inspection or repair.

NOTE: Units being returned for inspection or repair must be accompanied by a Return Material Authorization (RMA).

Technical or applications support is available via the internet at: https://novantaims.com

Maintenance

Check the product for dirt, dust, or damage at regular intervals, depending on the way it's used.

Replacing Units

Drives may perform unintended movements because of incorrect wiring, incorrect settings, incorrect data, or other errors.

Interference (EMC) may cause unpredictable responses in the system. Further, the behavior of the drive system is governed by numerous stored data or settings. Unsuitable settings or data may trigger unintended movements or responses to signals and disable monitoring functions.

⚠WARNING

UNINTENDED MOVEMENT

- Carefully install the wiring in accordance with the EMC requirements.
- Do NOT operate the drive system with unknown settings or data.
- Verify that the stored data and settings are correct.
- Carefully run configuration tests for all operating states and potential error situations.
- Verify the functions after replacing the product and also after making changes to the settings or data.
- Only start the system if there are no persons or obstructions in the zone of operation.

Failure to follow these instructions can result in death or serious injury.

Only start the system if there are no persons or obstructions in the zone of operation.

- Switch off all supply voltages. Verify that no voltages are present.
- Label all connections and uninstall the product.
- Note the identification number and the serial number shown on the product nameplate for later identification.
- Install the new product as per Chapter 4 “Installation” on page 42.
- Commission the product as per Chapter 5 “Configuration” on page 56.

Shipping, Storage, and Disposal

Removal **procedure:**

- Switch off all power supplies, verifying that all voltage sources have been turned off.
- Disconnect all power supplies.
- Pull out all plugs.
- Remove the product from the system.

Shipping

The product must be protected against shocks during transportation. If possible, use the original packaging for shipping.

Storage

The product may only be stored in spaces where the specified permissible ambient conditions for room temperature and humidity are met. Protect the product from dust and dirt.

Disposal

The product consists of various materials that can be recycled and must be disposed of separately. Dispose of the product in accordance with local regulations.

Appendix D:
Liberty MDrive with Absolute Encoder

Overview

This appendix covers the multi-turn absolute encoder functions for LMD CANopen products. The multi-turn absolute encoder holds and updates the position information regardless of the powered on/off state of the LMD device.

The absolute position in memory is powered by an internal source for up to 30 days, or by an external battery pack for up to five years.

Unboxing Procedure

When unboxing the product, the internal power storage should be considered to be in a discharged state.

1. Connect DC power in accordance with “Observe the permissible ambient conditions as listed in “Environmental Conditions” on page .Electrical Installation” on page 46 of this document.
2. Allow the unit to charge for a period of 24 hours. During this time programming and commissioning of the unit may be performed.
3. The internal storage level my be queried via the communications or network interface.
4. If an application requires position retention of the LMD in an unpowered state for greater than 30 days, an external Back-up Battery Pack (ICP0531) is required. This accessory will extend the data retention and update time up to five (5) years for up to six (6) LMD absolute encoder products.

Connection of the Multifunction Interface

Variance from Standard LMD Products

The pin configuration differs on LMD absolute encoder units as the analog input is replaced with the input for the Encoder Back-Up Battery Pack (ICP0531).

- P2A Pin 6: VBAT+
- P2A Pin 7: VBAT-

These pins are used to connect the optional ICP0531 Encoder Back-up Battery Pack.

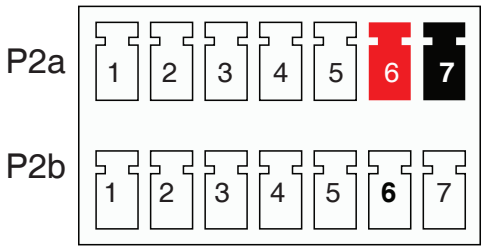

ICP0531 Encoder Back-up Battery Pack

The optional Encoder Back-up Battery Pack (ICP0531) will provide back-up power for the LMD Absolute Encoder circuitry, retaining and updating the position data for a period of up to five (5) years. The battery pack requires three (3) Energizer L91 1.5V AA Lithium batteries.

Dimensional Information

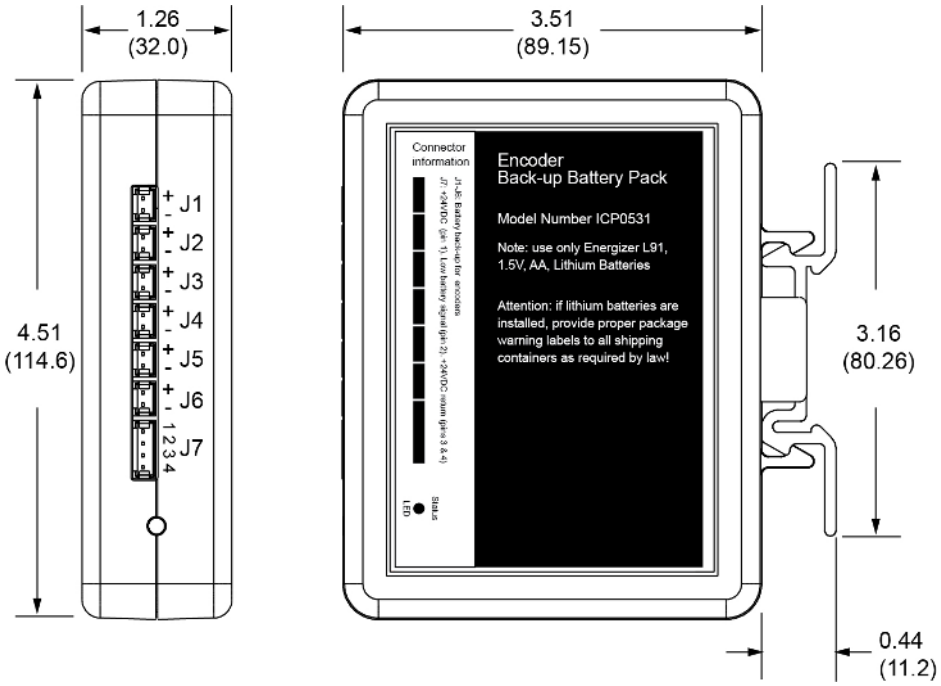

Battery Voltage Level Monitoring

The ICP0531 features a monitoring circuit which indicates a low-level state by two methods:

1. Flashing LED on the battery pack.
2. Low-Level warning output located at J7:2 (requires an external 24VDC signal).

Installing/Replacing the Batteries

NOTE: Use only Energizer L91 1.5V AA Lithium batteries.

⚠CAUTION
Do not load or transport lithium ion batteries if the packaging is damaged. A flammability hazard exists if package is damaged. Handle with care.

Attention: If Lithium batteries are installed, provide proper package warning labels to all shipping containers as required by law.

1. Open the battery pack by removing the four (4) screws on the back side of the case, as shown below:

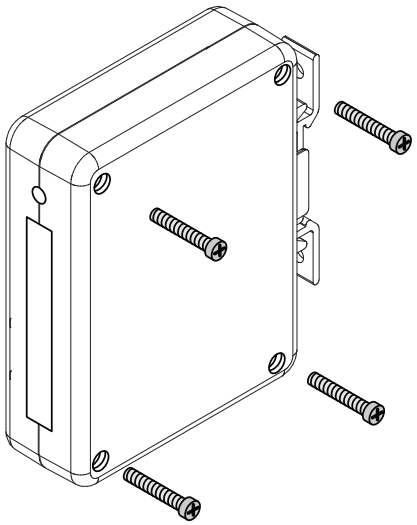

2. Install the batteries, taking care to match the imprints on the battery holder.

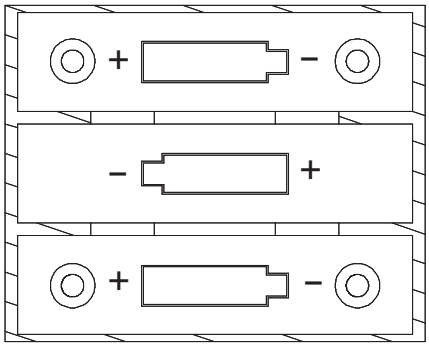

Connector Configuration

J1-J8: Encoder Backup Voltage

To connect encoder battery backup power to a single Absolute MDrive product, use development cable PD02-0531-FL1 (shown below).

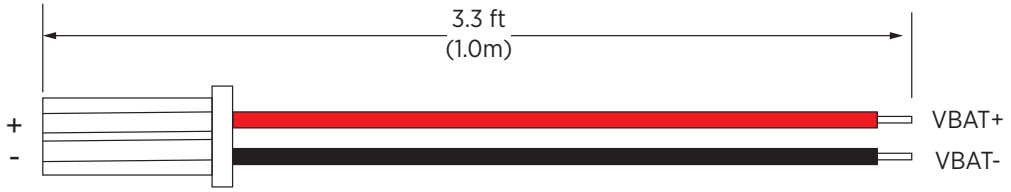

MFG	Housing P/N	Crimp Pin P/N	Crimp Pin Qty
AMP	280358-0	182206-2	2 ea

Pin#	Signal	Description	Wire color
1(+)	V BAT +	Battery positive supply to one (1) LMD Absolute encoder product	Red
2(–)	V BAT –	Battery negative (return)	Black

J7 Supply and Monitoring

To connect the 24 VDC system supply and optional low-level warning output, use development cable PD04-0531-FL1 (shown below)

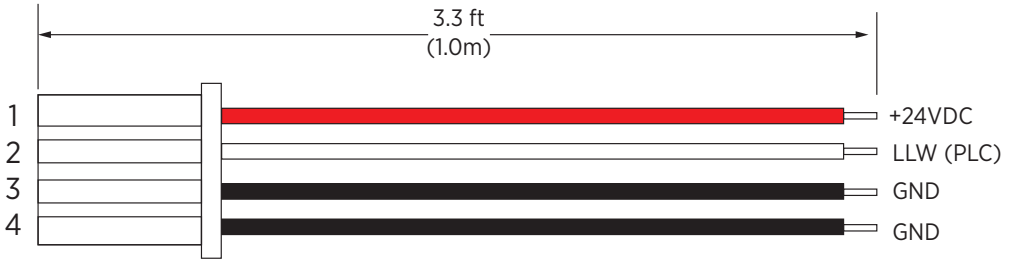

MFG	Housing P/N	Crimp Pin P/N	Crimp Pin Qty
AMP	280359-0	182206-2	4 ea

Pin#	Signal	Description	Wire Color
1	+VDC	+24 VDC Supply Voltage	Red
2	Low Level	Low Level Voltage Warning output	White
3	GND	+24 VDC return	Black
4	GND	+24 VDC return	Black

Connecting the Encoder Battery Pack

The following diagram shows the connection of the optional Encoder Back-up Battery Pack (ICP0531).

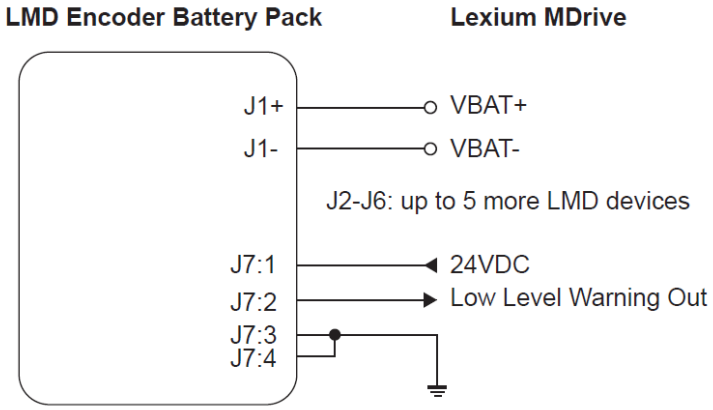

GLOSSARY

A

AC: Alternating current

Acceleration: The time rate of change of velocity with respect to a fixed reference frame. The commanded step rate is started at a base velocity and accelerated at a slew velocity at a defined and controlled rate or rate of changes.

ASCII: American Standard Code for Information Interchange. Standard for coding of characters.

C

CAN: (Controller Area Network), standardized open fieldbus as per ISO 11898, allows drives and other devices from different manufacturers to communicate.

CANopen: CANopen is a CAN-based higher layer protocol. It was developed as a standardized embedded network with highly flexible configuration capabilities. CANopen was designed for motion oriented machine control networks, such as handling systems. It is used in many various fields, such as medical equipment, off-road vehicles, maritime electronics, public transportation, building automation, etc.

Closed Loop System: In motion control, this term describes a system wherein a velocity or position (or both) sensor is used to generate signals for comparison to desired parameters. For cases where loads are not predictable, the closed loop feedback from an external encoder to the controller may be used for stall detection, position maintenance, or position verification.

D

Daisy Chain: This term is used to describe the linking of several devices in sequence, such that a single signal stream flows through one device and on to another.

DC: Direct current

Deadband: A range of input signals for which there is no system response.

Default Value: Factory setting.

Detent Torque: The periodic torque ripple resulting from the tendency of the magnetic rotor and stator poles to align themselves to positions of minimal reluctance. The measurement is taken with all phases de-energized.

Direction of Rotation: Rotation of the motor shaft in a clockwise or counterclockwise direction of rotation. Clockwise rotation is when the motor shaft rotates clockwise while looking at the end of the protruding motor shaft.

DOM: The Date of manufacturing on the nameplate of the device is shown in the format DD.MM.YY,
e.g., 31.12.19 (December 31, 2019).

Duty Cycle: For a repetitive cycle, the ratio of on time to total cycle time.

E

EMC: Electromagnetic compatibility

Encoder: Sensor for detection of the angular position of a rotating component. The motor encoder shows the angular position of the rotor.

Error: Operating state of the drive caused as a result of a discrepancy between a detected (computed, measured, or signaled) value or condition and the specified or theoretically correct value or condition.

Error Class: Classification of errors into groups. The different error classes allow for specific responses to faults (e.g., by severity).

G

Ground (Earth) Loop: A ground (earth) loop is any part of the DC return path (ground) that has more than one possible path between any two points.

H

Half Step: This term means that the motor shaft will move a distance of 0.9 degree (400 steps per shaft revolution) instead of moving 1.8 degree per digital pulse.

Hybrid Motion Technology™ (hMT): A motor control technology which bridges the gap between stepper and servo performance.

Holding Torque: The maximum torque or force that can be externally applied to a stopped, energized motor without causing the rotor to rotate continuously. This is also called “static torque”.

I

I/O: Inputs/outputs

Index Pulse: Signal of an encoder to reference the rotor position in the motor. The encoder returns one index pulse per revolution.

Inertia: A measure of an object’s resistance to a change in velocity. The larger an object’s inertia, the greater the torque required to accelerate or decelerate it. Inertia is a function of an object’s mass and shape. For the most efficient operation, the system-coupling ratio should be selected so that the reflected inertia of the load is equal to or no greater than 10 times the rotor inertia of the stepper motor.

Inertia (Reflected): Inertia as seen by the stepper motor when driving through a speed change, reducer, or gear train.

L

Lag: The amount (in full motor steps) that the rotor lags the stator. Lag conditions are caused by loading on the motor shaft, as during transient loading or rapid acceleration.

Lead: The amount (in full motor steps) that the rotor leads the stator. Lead conditions are caused by an overhauling load, as during periods of rapid deceleration.

Limit Switch: Switch that signals overtravel of the permissible range of travel.

Load: Any external resistance (static or dynamic) to motion that is applied to the motor.

Locked Rotor: When the lag/lead limit is reached, a timer starts a countdown that is determined by the user. The locked rotor will assert itself by triggering a flag and, depending on the selected mode, by disabling the output bridge.

Loss of synchronization: In traditional stepper systems, when the lead/lag relationship of the rotor and stator reaches two full motor steps, the alignment of the magnetic fields is broken and the motor will stall in a freewheeling state.

M

Microstepping: A control electronic technique that proportions the current in a stepper motor's windings to provide additional intermediate positions between poles. Produces smooth rotation over a wide range and high positional resolution. Typically, step resolutions range from 400 to 51,200 steps per shaft revolution.

Motor Phase Current: The available torque of a stepper motor is determined by the motor phase current. The higher the motor phase current the higher the torque.

N

NEMA: The acronym for the National Electrical Manufacturer's Association, an organization that sets standards for motors and other industrial electrical equipment.

O

Open Loop System: An open loop motion control system is where no external sensors are used to provide position or velocity feedback signals, such as encoder feedback of position.

Opto-Isolated: A method of sending a signal from one piece of equipment to another without the usual requirement of common ground potentials. The signal is transmitted optically with a light source (usually an LED) and a light sensor (usually a photo-sensitive transistor). These optical components provide electrical isolation.

P

Parameter: Device data and values that can be set by the user.

PLC: Programmable logic controller

Position Make-up: When active, the position make-up can correct for position errors occurring due to transient loads. The lost steps may be interleaved with incoming steps, or reinserted into the profile at the end of a move.

Power Stage: The power stage controls the motor. The power stage generates currents for controlling the motor on the basis of the positioning signals from the controller.

Q

Quick Stop: Function used to enable fast deceleration of the motor via a command or in the event of a malfunction.

R

Resolution: The smallest positioning increment that can be achieved.

Resonance: The frequency that a stepper motor system may begin to oscillate. Primary resonance frequency occurs at about one revolution per second. This oscillation will cause a loss of effective torque and may result in loss of synchronism. The designer should consider reducing or shifting the resonance frequency by utilizing half step or micro-step techniques or work outside the primary resonance frequency.

Rotor: The moving part of the motor, consisting of the shaft and the magnets. These magnets are similar to the field winding of a brush type DC motor.

Rotor Inertia: The rotational inertia of the rotor and shaft.

RS485: Fieldbus interface as per EIA-485 which enables serial data transmission with multiple devices.

S

Sinking Current: Refers to the current flowing into the output of the chip. This means that a device connected between the positive supply and the chip output will be switched on when the output is low.

Slew: The position of a move profile where the motor is operating at a constant velocity.

Sourcing Current: Refers to the current flowing out of the output of the chip. This means that a device connected between the chip output and the negative supply will be switched on when the output is high.

Stall Detection: Stall detection monitors whether the index pulse is always correctly triggered at the same angle position of the motor shaft.

Stator: The stationary part of the motor. Specifically, it is the iron core with the wire winding in it that is pressed into the shell of the frame. The winding pattern determines the voltage constant of the motor.

T

Torque Ramp: Deceleration of the motor with the maximum possible deceleration, which is only limited by the maximum permissible current. The higher the permissible braking current, the stronger the deceleration. Because energy is recovered depending on the coupled load, the voltage may increase to excessively high values. In this case the maximum permissible current must be reduced.

V

Variable Current Control: When active, variable current control will control the motor current as such to maintain the torque and speed on the load to what is required by the profile. This leads to reduced motor heating and greater system efficiency.

W

Warning: If not used within the context of safety instructions, a warning alerts to a potential problem detected by a monitoring function. A warning is not a error and does not cause a transition of the operating state. Warnings belong to error class 0.

Warranty

For the latest warranty and product information, visit:
https://novantaims.com/warranty-and-disclaimer/

Document Revision History

Liberty MDrive CANopen: IMS-MN-LMDA42_A		
Date	**Revision**	**Changes**
02/09/2022	Rev A	Reformatting for company name change. New document number applied.

Novanta IMS is a part of the Precision Motion Group within Novanta, a leading technology company that delivers innovation to medical and advanced industrial OEMS.

As standards, specifications, and designs may change, confirmation of the information given in this publication can be found in the product disclaimer and most recent product information, available online.
https://novantaims.com/all-products/

© 2022 Novanta IMS. All rights reserved.
Photos: Novanta IMS
Print: Novanta IMS

To provide feedback on Novanta IMS documentation, send an e-mail to:
documentation@imshome.com

Novanta IMS

370 North Main Street
Marlborough, CT 06447
Phone: (860) 295-6102
www.novantaims.com